ICS 23.020.30

National Standard of the People's Republic of China

GB 150.4 - 20xx
Replaces Part of GB 150 - 1998

Pressure Vessels
Part 4: Fabrication, inspection and testing, and acceptance

(Draft for approval)

Issue Date: 20XX – XX – XX

Implementation Date: XX0XX – XX – XX

Issued by the General Administration of Quality Supervision, Inspection and Quarantine of the People's Republic of China

Table of contents

Foreword

GB 150 Pressure Vessels consists of following four Parts:
_____Part 1: General requirements
_____Part 2: Materials
_____Part 3: Designs;
_____Part 4: Fabrication, inspection and testing, and acceptance.

This Part is the Part 4 of GB 150. The draft procedure of this Part is in accordance with the provisions specified in GB /T 1.1 – 2009 Directives for standardisation.

This Part replaces some section contents in Chapter 10 and Appendix C of GB 150 – 1998 Steel pressure vessels, compares with GB 150 – 1998, apart from the editorial amendments, other changes made in the main technical contents are as below:

a) Added the normative references and technical terms.

b) Chapter 4 and Chapter 5:
---- Moved the provisions on the classification of weld joints of pressure vessels to GB 150.1 and added Category E weld joints;
---- Added provisions on the risk preventing and controlling during the manufacturing process of pressure vessels, specifies provisions on the applications of new technologies, new processes and new methods as well as provisions on the information management.
---- Added provisions on the design modification, material substitution and material retesting during the manufacturing process of pressure vessels.

c) Chapter 6
---- Amended the provisions on the actual thickness of the pressure components after forming;
---- Amended about the forming methods, the deviation inspection of the head shapes as well as the requirements on the straight edges of heads are not permitted to have any longitudinal folds;
---- Amended the cylinder linearity inspection method and requirements on the tolerance, the layout of the weld joints on shells.

d) Chapter 7:
---- Amended the required scope for the implementation of the welding procedure qualification assessment and the retention time period of the technical files, appropriately added provisions on the sampling, test methods, compliance quota and the retention time period of the samples.
---- Amended the provisions on the once more heat treatment after the welding repair.

e) Chapter 8 (GB 150 – 1998, 10.4)
-------Added provisions on the heat treatments for the property restore and the heat treatments for improving the mechanical properties and other heat treatments of the formed pressure components;
-------Added the requirements on the heat treatment furnaces, heat treatment technologies and records;
--------Amended the required implementation scope for the post-weld heat treatment of pressure vessels and its pressure components, and the operating requirements on the post-weld heat

treatment;

f) Chapter 9:
---------Adjusted the ranges of the product welding samples, base material heat treatment samples as well as other samples and test items which are required to be prepared, relevantly added the requirements on sampling, inspection and assessment;
---------Added provisions on the preparation of the product welding samples and the base metal heat treatment samples. Appropriately added requirements on the sampling, inspection and the qualification assessment.

g) Chapter 10:
---------Added provisions on the choices of the non-destructive testing and the implementation time of the non-destructive testing;
---------Adjusted the scope of full radiographic (100%) testing or ultrasonic testing, local radiographic testing or ultrasonic testing and surface testing, added the requirements on the technical grades of radiographic testing and ultrasonic testing.
---------Added the time of flight diffraction technique (TOFD), and specified the compliance grades;
---------Added requirements on the combination testing;
---------Added the requirement on the retention of non-destructive testing files.

h) Chapter 11:
---------Added the pressure test method for the gas-hydrostatic combined test;
---------Amended the provisions on the temperature of pressure test;
---------Clarified that the airtightness test method is one of the leak testing methods, added three leak testing methods such as the ammonia leak test, helium leak test and halogen leak test.

i) Chapter 12:
--------Added the requirements on the fabrication, inspection and testing, and acceptance of wrapped layered cylindrical entirety pressure vessels and flat-steel ribbon wound pressure vessels.

j) Chapter 13:
---------Adjusted the contents of the quality certificate issued when the pressure vessels leaving factory, added required documents;
---------Added the contents of the product nameplate, added items such as equipment codes.

This Standard was proposed and formulated by China Standardisation Committee on Boilers and Pressure Vessels (SAC/TC 262).

The main organisation is responsible for the drafting of this Standard is:
Hefei General Machinery Research Institute;

The organisations participated in the drafting of this Standard are:
China Special Equipment Inspection & Research Institute;
SINOPEC Engineering Incorporation;
Lanzhou Petrochemical Machinery Plant;
SINOPEC Nanjing Chemical Industrial Co. Ltd, Chemical Machinery Works

The main drafters of this Standard are: Cui Jun, Shou BiNan, Chen XueDong, Yang GuoYi, Chen YongDong, Li ShiYu, Wang Bing, Xue Feng, Chen JianYu, Han Bing, Yao ZuoQuan.

This Standard replaces the previous versions: GB 150 – 1989, GB 150 – 1998.

The China Standardisation Committee on Boiler and Pressure Vessels (SAC/TC 262) is responsible for the interpretation of this Standard.

Pressure Vessels
Part 4: Fabrication, inspection and testing, and acceptance

~~1~~ 1 Scope

1.1 This Standard specifies the requirements for the fabrication, inspection and testing, and acceptance of steel pressure vessels within the applicable scope of GB 150; the requirements for the fabrication, inspection and testing, and acceptance of pressure vessels made of other materials shall be in accordance with the relevant standards.

1.2 This Standard is applicable to the structures of pressure vessels as follows: single-layer welded pressure vessels, forged-welded pressure vessels, and multi- layered pressure vessels (Including wrapped layered cylindrical segment, wrapped layered cylindrical entirety, flat steel ribbon wound, and shrink fit pressure vessels).

1.3 With regard to low-temperature austenitic steel pressure vessels (design temperature lower than -196°C), the additional requirements for the fabrication, inspection and testing, and acceptance should be specified by the consultations between the parties who participate in the construction of the pressure vessels, such requirements should be stated in the design documents by the design units.

~~2~~ 2 Normative References

The following documents are absolutely essential to the application of this Standard. For dated reference documents, only the dated versions apply to this Standard; For undated reference documents, the latest versions (including all amendments) apply to this Standard.

GB 150.1 Pressure vessels Part 1: General requirements

GB 150.3 Pressure vessels Part 2: Materials

GB 150.3 Pressure vessels Part 3: Design

GB/T 196 General purpose metric screw threads – Basic dimensions

GB/T 197 General purpose metric screw threads – Tolerance

GB/T 228 Metallic materials – Tensile testing at ambient temperature

GB/T 229 Metallic materials – Charpy pendulum impact test method

GB/T 232 Metallic materials – Bend test

GB/T 1804 General tolerances – Tolerances for linear and angular dimensions without individual tolerance indications

GB/T 25198 Heads for pressure vessels

GB/T 21433 Detecting susceptibility to intergranular corrosion in stainless steel pressure vessel

JB/T 4700 Type and specification for pressure vessel flanges

JB/T 4701 A-type socket-weld flange

JB/T 4702 B-type socket-weld flange

JB/T 4703 Welding Neck flange

JB/T 4704 Non-metallic gaskets

JB/T 4705 Spiral wound gaskets

JB/T 4706 Double-jacketed gaskets

JB/T 4707 Stud bolts

JB/T 4708 Welding procedure qualification for pressure equipment

JB/T 4709 Welding specification for steel pressure vessels

JB/T 4711 Coating and packing for pressure vessels transport

JB/T 4730.1 Non-destructive testing for pressure equipment – Part 1: General requirements

JB/T 4730.2 Non-destructive testing for pressure equipment – Part 2: Radiographic testing

JB/T 4730.3 Non-destructive testing for pressure equipment – Part 3: Ultrasonic testing

JB/T 4730.4 Non-destructive testing for pressure equipment – Part 4: Magnetic particle testing

JB/T 4730.5 Non-destructive testing for pressure equipment – Part 5 Penetrant testing

JB/T 4730.6 Non-destructive testing for pressure equipment – Part 6 Eddy current testing

JB/T 4736 Reinforcing pad

JB/T 4744 Mechanical property tests of product welded test coupons for steel pressure vessels

JB/T 4747.1 Technical permission of steel welding rod purchasing for pressure vessels – Part 1 Terms and conditions of purchasing

JB/T 4747.2 Technical permission of steel welding rod purchasing for pressure vessels – Part 2 • Steel welding rod

JB/T 4747.3 Technical permission of steel welding rod purchasing for pressure vessels – Part 3: Gas

shielded arc welding steel wires and filler wires

JB/T 4747.4 Technical permission of steel welding rod purchasing for pressure vessels – Part 4: Submerged-arc welding steel wires and welding fluxes

JB/T 4747.5 Technical permission of steel welding rod purchasing for pressure vessels – Part 5: Build-up welding stainless steel strips and welding fluxes

JB/T 4747.6 Technical permission of steel welding rod purchasing for pressure vessels – Part 6: Aluminium and aluminium alloy welding wires and filler wires

JB/T 4747.7 Technical permission of steel welding rod purchasing for pressure vessels – Part 7: Titanium and titanium alloy welding wires and filler wires

TSG R004 Technical Supervision Regulation for Safety of Stationary Pressure Vessels

~~3~~ 3 Terms

The terms and definitions specified in GB 150.1 and below apply to this Standard.

3.1 Forged-welded pressure vessel

Pressure vessels formed by the connections of circumferential welded joints, for which the cylindrical segments or heads (or cylindrical body ends) are made by machined cylindrical shapes or other shapes of forged parts.

3.2 Layered pressure vessel
Pressure vessels for which the cylinders are wrapped by two or more than two layers of sheets or strips, the construction between the layers are non-welding method, lined pressure vessels are not included.

3.3 Wrapped pressure vessel
Layered pressure vessels for which the inner cylinders are wrapped layer by layer of sheets or strips.
Wrapped pressure vessels including the following two types of structures:

a) Wrapped layered cylindrical segment pressure vessels, which means that the pressure vessels are formed by the connection of circumferential welded joints and where a single segment of inner cylinder is wrapped by multi-layers of sheets.

b) Wrapped layered cylindrical entirety pressure vessels, which means that pressure vessels for which its entire inner cylinders are wrapped by multi-layers of sheets.

3.4 Flat steel ribbon wound pressure vessel
Layered pressure vessels formed by staggered winding steel strips layer by layer along a certain winding angle.

3.5 Shrink fit pressure vessel
By shrinking fit the cylindrical segments which have a certain shrink range, layer by layer of

several layers as heating up, and eliminating the shrink fit prestress by heat treatment and forming a shrink fit cylindrical segment, then by way of welding the circumferential welded joints to formed a pressure vessel.

3.6 Thickness of steel material
The thicknesses of the components such as steel sheets, steel pipes or forged parts etc. Which can directly form a pressure vessel, presented by $\bullet_{s.}$

3.7 Cold forming
The plastic deformation process conducted under the recrystallisation temperature of the workpiece materials.
In engineering practice, usually the plastic deformation process conducted below ambient temperature is known as cold forming; plastic deformation process conducted between cold forming and hot forming is known as warm forming.

3.8 Hot forming
Plastic deformation process conducted above the recrystallisation temperature of the workpiece materials.

4 General provisions

4.1 Fabrication, inspection and testing, and acceptance basis of pressure vessels

4.1.1 The fabrication, inspection and testing, and acceptance of pressure vessels shall comply with the provisions in this Part and the requirements in the design documents. Within the application scope of the following criteria, if there is no additional provisions specified then generally should meet the following requirements:

a) The heads should meet the provisions specified in GB/T 25198;

b) The reinforcing pads should meet the provisions specified in JB/T 4736;

c) The pressure vessel flanges and its connectors should meet the provisions specified in JB/T 4700–4707;

d) The welding materials should meet the provisions specified in JB/T 4747;

4.1.2 The selection of pipe flanges should be in accordance with the relevant provisions specified in TSG R0004.

4.2 The risk preventing and controlling during the manufacturing process of pressure vessels
For any pressure vessel if the design unit has issued a risk assessment report, then on the basis of the main failure modes, pressure vessel fabrication and inspection requirements and suggestion listed in this risk assessment report, the manufacturing unit should complete the following tasks:

a) Reasonably determine the manufacturing and inspection technology;

b) The failure modes, the prevention and protection measures stated in the risk assessment report should be reflected in the product quality documents.

4.3 Design amendments and material substitution
Before the manufacturing unit carries out any modification to the original design and substitution of the pressure component materials, the manufacturing unit should obtain a written approval from the original design unit and make a detailed record on the project completion drawings.

4.4 Application of new technologies and new processes
When using new technologies, new processes and new methods which are not listed in this Standard and are for the manufacturing and inspection of pressure vessels, the provisions should be subjected to the technical assessment specified in TSG R0004:

a) When using the non-destructive testing method which is not listed in JB/T 4730 or beyond the applicable scope of JB/T 4730 to carry out non-destructive testing to pressure vessels which are still in preparation;

b) When using other methods to eliminate the residual stress of pressure vessels and pressure components.

4.5 Information management
The manufacturing units of pressure vessels should timely input the relevant data of the pressure vessels into the information management system for special equipment as required.

5 Material retesting, segmentation and symbol transplantation

5.1 Material retesting

5.1.1 The following materials should be retested:

a) The purchased Grade IV forged parts for the use of Type III pressure vessels;

b) The main pressure components for which the authenticity of their quality certificates can not be determined, or for which the properties and chemical composition are doubtful;

c) The imported materials used for preparing the main pressure components;

d) Austenitic stainless steel flat sheets used for preparing the main pressure components;

e) Materials requested in the design documents for retesting.

5.1.2 Austenitic stainless steel flat sheets should be retested for its mechanical properties (for whole roll users, after the flat sheets are opened for operation, a group of retest samples from the heads, middle and tails of the corresponding flat sheets should be intercepted; for non-whole roll users, a group of retest samples from the ends of the flat sheets should be intercepted); for retesting situations stated in a), b), c) and e) of 5.1.1, should retest the chemical composition by according to the furnace number and retest the mechanical properties by according to the lot number.

5.1.3 The material retesting results should be consistent with the provisions of relevant material standards or the requirements in the design documents.

5.1.4 Low-temperature welding rods should be retested for the percentage of moisture for covering or retested for the diffusible hydrogen content in deposited metals, the testing method should be in

accordance with the corresponding welding rod standards or design documents.

5.2 Material segmentation
Material segmentation consists of cold segmentation or hot segmentation methods. When using hot segmentation method to separate materials, any surface slag and any surface layer which may effect the manufacturing quality should be cleared.

5.3 Material symbol transplantation

5.3.1 Materials used to manufacture pressure components should carry traceable symbols. During manufacturing process, if such an original symbol is going to be removed from the material or the material is planed to be cut into pieces, then the manufacturing unit should specify an expression method of the symbol, and complete the symbol transplantation before conducting the material segmentation.

5.3.2 For stainless steel sheets and composite steel sheets which are corrosion-resistant, no embossed marking must be used on the corrosion-resistant surfaces.

5.3.3 Pressure components of low temperature pressure vessels shall not be marked by embossing methods.

6 Cold forming, hot forming and assembly

6.1 Forming

6.1.1 The manufacturing unit should according to the manufacturing processes to determine the machining allowances, to ensure that the actual thickness of the formed pressure components are not thinner than the minimum forming thickness that is stated in the design drawings.
6.1.2 Steel pressure components which were treated with normalising, normalising and tempering or quenching, should use cold forming or warm forming; when warm forming is adopted, the temperature range of the temper brittleness should be avoided.

6.2 Surface grinding

6.2.1 During manufacturing process, any mechanical damage to the surface of the material should be avoided. For defects such as acute wounds and local wounds, grooves suffered by the corrosion-resistant surfaces of stainless steel pressure vessels should be ground out, the maximum gradient of the grinding should be 1:3, the grinding depth should not exceed 5% of the steel thickness $\cdot_s$ of that location, and not more than 2mm, otherwise a welding repair should be conducted.

6.2.2 With regard to formed parts, welded parts of composite steel sheets and metal linings, the grinding depth shall not be greater than the 30% of the thickness of the cladding layer (or deposit welding layer, lining) and not larger than 1mm, otherwise a welding repair should be conducted.

6.3 Groove
Grooves shall meet the following requirements:

a) On the groove surfaces, there shall be no defects such as cracks, delamination or inclusions allowed.

b) Groove surfaces of low-alloy steel materials with a standard tensile strength lower limit R_m • 540MPa, and the groove surfaces of Cr-Mo low-alloy steel materials after hot segmentation, after the completion of the processing, should according to JB / T 4730.4 to conduct magnetic particle testing, Grade I should be regarded as qualified;

c) Before conducting welding, any oxide scale, greasy dirt, slag and other harmful impurities which are within the range of 20 mm (the distance from the edge of the groove) from the base material surface and the groove should be cleared away.

6.4 Heads

6.4.1 The distance between various disjoint welding centrelines of the heads should be at least 3 times of the head steel thickness • s, and not less than 100mm. When a convex head is made by the assembly of the formed segments and a top circular plate, the welding directions between the segments should be radial and circumferential, see Diagram 1.

For any head which is assembled first formed later, the inner surface of the welds and the outer surface of the welds which can affect the forming quality, should be polished to be the same level as the base metal.

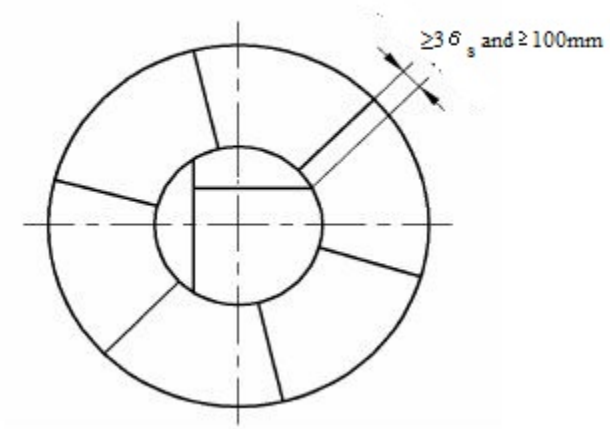

Diagram 1 The weld seam arrangement of a convex head formed by segmentation

6.4.2 Use a full size gap inner sample plate to inspect the shape deviations (see Diagram 2) of the inner surfaces of elliptical heads, dished heads and spherical heads. The indentation size should be 3% – 5% D_i, the maximum shape deviation for convex shall not exceed 1.25% D_i, for concave shall not exceed 0.625% D_i. The sample plate should be perpendicular to the testing surface during inspection. For heads shown in Figure 1 as forming first assembled alter, allow the sample plate to avoid the weld for measurement.

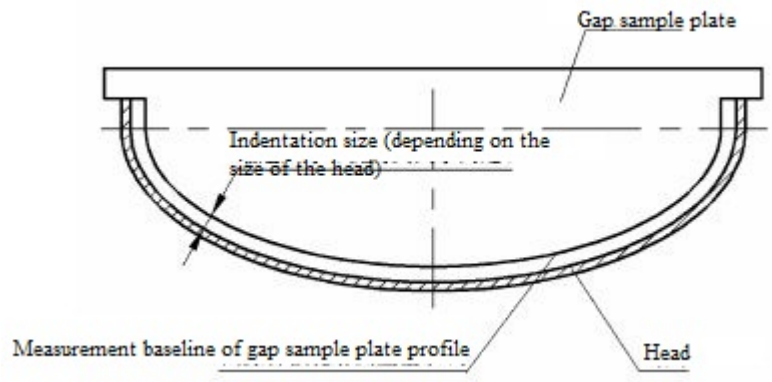

Diagram 2 The shape deviation inspection of convex heads

6.4.3 For dished heads and toriconical heads, the knuckle radius of the transition zone shall not be less than the specified design value.

6.4.4 There shall be no longitudinal folds permitted on the straight edges.

6.5 Cylinder and shell

6.5.1 The align deviation value b (see Diagram 3) for Category A, B weld joints should meet the requirements in Table 1. the align deviation value b for forged and welded Category B weld joints should be less than 1/8 of the steel thickness •$_s$ at the alignment location, and not greater than 5mm.

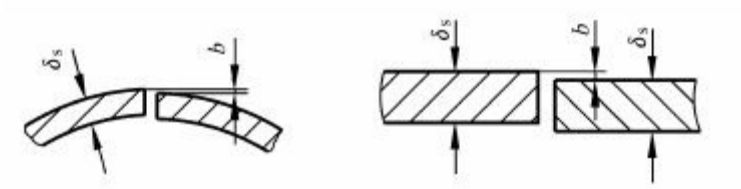

Diagram 3 The align deviation value of Category A, B weld joints

Table 1 The align deviation value for Category A, B weld joints

Alignment location steel thickness •$_s$	According to the classification of the weld joints to differentiate the align deviation value b	
	Category A weld joints	Category B weld joints
• 12	• 1/4 •$_s$	• 1/4•$_s$
> 12 – 20	• 3	• 1/4•$_s$
> 20 – 40	• 3	• 5
> 40 – 50	• 3	• 1/8 •$_s$
> 50	• 1/16 •$_s$, and • 10	• 1/8 •$_s$, and • 20
The circumferential joints which connect the spherical head and the cylinder, and the Category A butt joints which connect the embedded nozzles and the cylinder or the head, shall be according to the requirements for Category B weld joints to determine the align deviation value.		

The align deviation value b (see Diagram 4) for any composite steel sheet shall not be greater than 5% of the cladding thickness of this steel sheet and not more than 2mm.

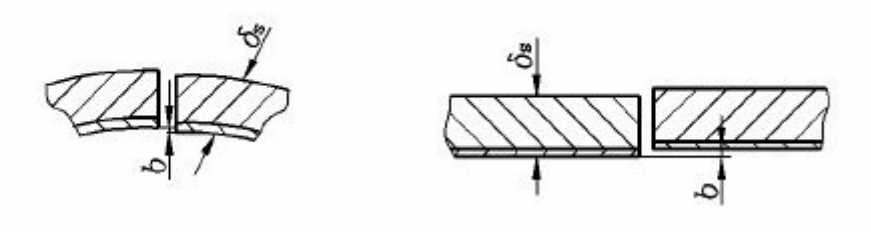

Diagram 4 The align deviation value for Category A, B weld joints of composite steel sheets

6.5.2 The edge E formed by the circumferential and axial of welded joints, should use an internal sample plate (or external sample plate) with the chord length equals to $D_i / 6$ and not less than 300mm, and a ruler to check (see Diagram 5, Diagram 6), the E value shall not exceed ($\bullet_s$/10 + 2) mm, and not more than 5mm.

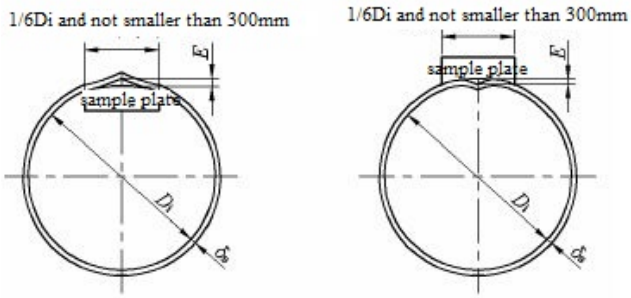

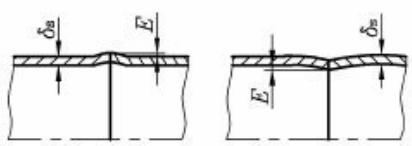

Diagram 5 Circumferential edge E at welded joint Diagram 6 Axial edge E at welded joint

6.5.3 For Category B weld joints and Category A weld joints which connect the cylinders and the spherical heads, when the steel thickness of both sides are not the same, if the thickness of the thinner plate $\bullet_{s1}$ • 10mm, and the thickness difference between the two plates is more than 3mm; or if the thickness of the thinner plate $\bullet_{s1}$> 10mm, and the thickness difference between the two plates is more than 30% $\bullet_{s1}$, or more than 5mm, then they should according to the requirements in Diagram 7 to thin the edge of the thicker plate from one side or both sides, or according to the same requirements, use the welding method to weld the edge of the thinner plate to be an inclined surface.

When the thickness difference between the two plates is less than the above mentioned values, then the align deviation value b shall be in accordance with the requirements in 6.5.1, and the align deviation value b shall be determined by using the thickness of the thinner plate as the benchmark. When measuring the align deviation value b, the thickness difference between the two plates should not be included.

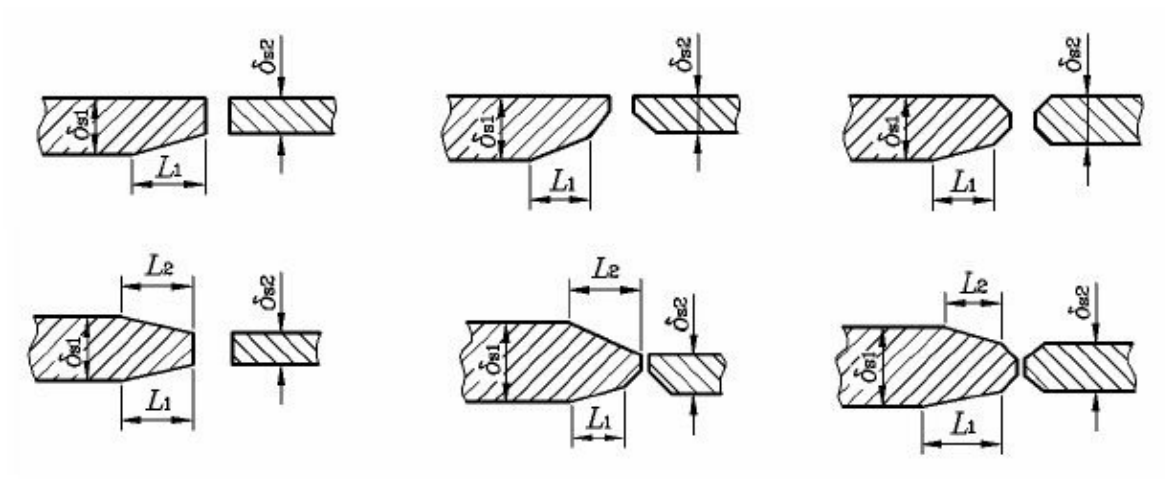

$$L_1, L_2 \geqslant 3(\delta_{s1} - \delta_{s2})$$

Diagram 7 The connection types of the Category B weld joints with different thicknesses and the Category A weld joints which connect the cylinders and the spherical heads.

6.5.4 Unless otherwise specified in the drawings, the linear tolerance of a cylinder should not exceed 1% of the cylinder length (L). When the shell length of a vertical pressure vessel is more than 30m, the linear tolerance of its cylinder shall not exceed (0.5L / 1000) + 15.

Note: the inspection of the cylinder linearity is conducted by way of inspecting the horizontal and the vertical plane of the centre line, the measurement is conducted by along the 0°, 90°, 180°, 270° four circumference locations. The distance from the measuring positions to the centre line of the cylinder longitudinal weld joint should not be less than 100mm. If the shell thickness is different, then when calculating the linearity, the thickness difference should be deducted.

6.5.5 When conducting the assembly, the layout of the welded joints on the shell should meet the following requirements:

a) The outer arc length between the Category A joints of the adjacent cylindrical segments, should be more than 3 times of the steel thickness $\bullet_s$, and not less than 100mm;

b) The outer arc lengths between the Category A butt joints on the head, the embedded Category A joints on the head, and the Category A joints of the cylindrical segments which are adjacent to the head, should all be greater than 3 times of the steel thickness $\bullet_s$, and not less than 100mm;

c) Among the cylinder assembly, the length of any individual cylindrical segment shall not be less than 300mm;

d) Not suitable to use cross welding.

Note: The outer arc length is between the centre lines of the welded joints, the measured distance along the outer surface of the shell.

6.5.6 The flange facing should be perpendicular to the spindle centre line of the connection pipe or the cylinder. The assembly between the connecting components and the flange, and the shell should ensure the level or vertical of the flange facing (if specially required, such as the connection pipes should be according to the drawings specification), the deviation shall not exceed 1% of the external diameter of the flange (when the external diameter of the flange is less than 100mm, should be regarded as 100mm), and not larger than 3mm.

Flange bolt holes should be arranged across the middle with the shell main axis or the plumb line (see Diagram 8). Any special requirement should be indicated on drawings.

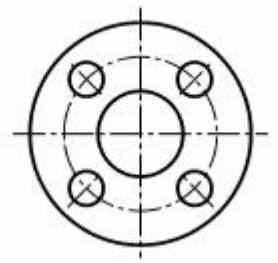

Diagram 8 The cross-middle arrangement of flange bolt holes

6.5.7 The base rings of vertical vessels, and the anchor bolt holes on the floor base should be uniformly arranged. The diameter tolerance of the centre circle, the chord length tolerance between two adjacent holes, and the chord length tolerance between any two holes should not be more than ± 3mm.

6.5.8 Weldings conducted between the inner parts of a pressure vessel and the shell should try to avoid the Category A, B weld joints on the shell.

6.5.9 Any welding seam on pressure vessels which is covered by a reinforcing pad, support or cushion plates etc., should be polished to be level with the base metal.

6.5.10 After the welding of a pressure vessel is completed, the diameter of the shell should be checked, the requirements are as the following:

a) The difference between the maximum inner diameter and minimum inner diameter of a same section of the shell should not exceed 1% of the inner diameter D_i (for forged-welded pressure vessels shall be 1 ‰) of this section, and not be larger than 25mm (see Diagram 9);

b) When the distance between the section inspected to the opening centre is smaller than the opening diameter, then the difference between the maximum inner diameter and minimum inner diameter of this section, should not exceed the sum of 1% of the inner diameter Di of this section (for forged-welded pressure vessels shall be 1 ‰) and 2% of the opening diameter, and not be larger than 25mm.

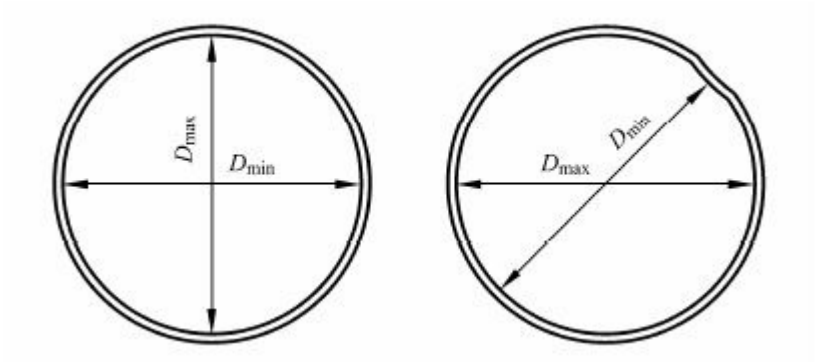

Diagram 9 The difference between the maximum inner diameter and minimum inner diameter of the same section of a sheet

6.5.11 After the welding of an external pressure vessel is completed, it is necessary according to the following requirements to check the roundness of the shell:

a) Use an inner arched or outer arched sample plate (depending on the measurement points) to measure. The arc radius of the sample plate is equal to the inner radius or the outer radius of the shell, the chord length is equal to two times of the arc length specific in Diagram 4-14 of GB 150.3. The measurement points should avoid the welded joints or other raised parts.

b) The maximum positive-negative deviation e which is measured by using the sample plate along the shell radial shall not be greater than the maximum allowable deviation indicated in Diagram 10. When the intersection point of D_o / •$_e$ and L / D_o is located between any two curves in Diagram 10, then its maximum positive-negative deviation e shall be determined by the interpolation method; When the intersection point of D_o / •$_e$ and L / D_o is located above of the e = 1.0 •$_e$ curve or below the e = 0.2•$_e$ curve, its maximum positive-negative deviations e shall not be greater than •$_e$ and 0.2•$_e$ value respectively.

c) The L and D_o of the cylinder and conical shells should be selected by according to the provisions of GB 150.3, L for the spherical shell is taken as $0.5D_o$; with regard to conical shell, D_o should be taken as the outer diameter D_{ox} of the conical shell on which the measurement point is, L is taken as L_e (D_d/D_{ox}), among which, the equivalent length L_e should be calculated by according to formula (5-20) in GB 150.3.

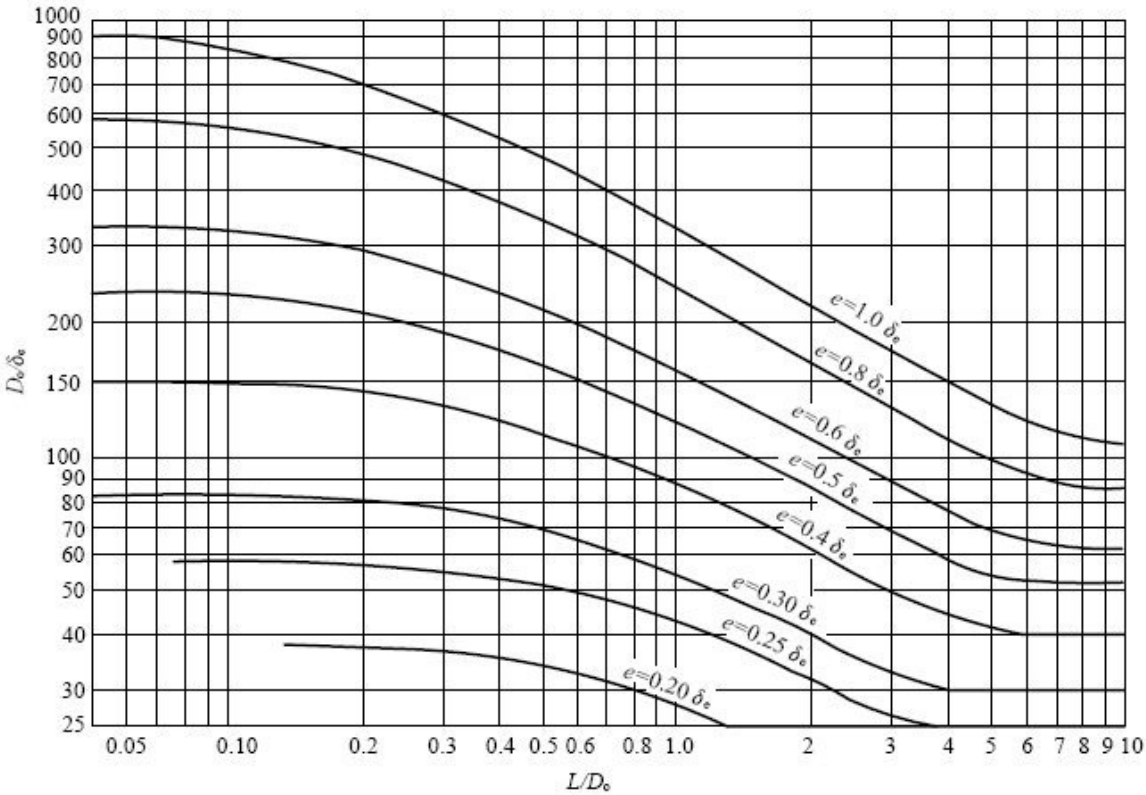

Diagram 10 The maximum allowable deviation of external pressure shell roundness

6.6 Flange and flat cover

6.6.1 Pressure vessel flanges are processed by according to JB / T 4700 – JB / T 4703, the processing of pipe flanges should be conducted in accordance with the corresponding standards.

6.6.2 The processing of flat covers and the cylinder ends should be conducted by according to the following provisions:

a) The diameter tolerance between the centre circles of stud hole or bolt hole, as well as the chord length tolerance between two adjacent holes shall be ± 0.6mm; the chord length tolerance between any two holes should be according to the specifications in Table 2:

Table 2 The chord length tolerance between any two holes of flange stud hole or bolt hole

Design inner diameter D_i	< 600	600 – 1200	> 1200
Tolerance	± 1.0	± 1.5	± 2.0

b) The perpendicularity tolerance between the screw centre line and the end surface shall not exceed 0.25%;

c) The basic dimension and tolerances of each thread should be according to the provisions in GB/T 196, GB/T 197;

d) The thread precision of a screw is a general moderate accuracy, or selected by appropriate standards.

6.7 Bolts, studs and nuts

6.7.1 Bolts, studs and nuts with nominal diameter not bigger than M36 should be manufactured according to the corresponding standards.

6.7.2 Flange studs of pressure vessel shall be according to provisions specified in JB / T 4707.

6.7.3 Studs and nuts with nominal diameter greater than M36, apart from meeting the requirements stated in c) and d) of 6.6.2 and corresponding standards, also should meet the following requirements:

a) Studs which require heat treatment, its samples and tests should be in accordance with the relevant provisions in GB 150.2;

b) Semi-finished nuts after been through heat treatment, should be conducted with hardness test.

c) Studs should be conducted with surface test in accordance with JB / T 4730, Grade I shall be regarded as qualified.

6.8 Assembly and other requirements

6.8.1 The limit deviation of the linear dimension of machined surface and non-machined surface should be according to the requirements of Grade m and Grade c which are specified in GB/T 1804.

6.8.2 During the assembly of the pressure components, must not carry out forceful levelling.

6.8.3 Inspections should be conducted of the main geometry dimensions and nozzle location of pressure vessels, and the results should meet the drawing specifications.

7 Welding

7.1 Welding preparation and welding environment

7.1.1 Store rooms for the storage of welding rods, welding fluxes and other welding materials should be kept dry. The relative humidity of the store rooms shall not exceed 60%.

7.1.2 When the welding environment is in one of the following situations, and if there is no effective protection measures provided, then the welding process should be prohibited:

a) When conducting shielded arc welding, wind speed greater than 10m/s.

b) When conducting gas arc welding, wind speed greater than 2m/s.

c) Relative humidity greater than 90%.

d) When it is snowing, or raining.

e) When the welding environment temperature is lower than -20°C.

7.1.3 When the temperature of a welding part is lower than 0°C, then within the range of 100mm of the welding location, should be preheated to above 15°C.

7.2 Welding procedure

7.2.1 Before conducting welding to a pressure vessel, the welding seam of the pressure components, welding seam welded with pressure components, tack welding seam welded into a permanent welding seam, the surface build-up welding and patch welding of the base metal of the pressure vessel, as well as the re-repair welding seam of the above mentioned welding seams, all should be subjected to welding procedure qualifications assessment by according to JB/T 4708 or get support from the assessed and qualified welding procedures.

7.2.2 Any imported material (including fillers) which is used for welding structural pressure components, before it is used for the first time by the manufacturing unit of the pressure vessel, the material should be conducted with a welding procedure qualification assessment by according to JB/T 4708.

7.2.3 For any chromium-nickel austenitic stainless steel pressure vessel with a design temperature in the range of -196°C to -100°C, should be according to the design temperature to select an appropriate welding method, and the carbon content of the base metal should be less than or equal to 0.10% of the chromium-nickel austenitic stainless steel; during the appropriate welding procedure qualification assessment, should conduct the low temperature Charpy (V-notch) impact test of the welding metal, the absorbing energy during the impact which is not higher than the design temperature must not be less than 31J (When the design temperature is lower than -192°C, the impact test temperature should be regarded as -192°C).

7.2.4 The welding procedure qualification assessment of low temperature pressure vessels, should include the low temperature Charpy (V-notch) impact test on the weld seam and the heat affected zone. The sampling method of the impact test should be determined by according to the requirements specified in JB/T 4708.

Impact test temperature should not exceed the test temperature which is indicated in the design drawings. When the base metal on both sides of a welding seam have different impact test requirements, the low-temperature impact energy should be the lower value of the tensile strength of the base metal on both sides and should be consistent with the requirements indicated in the design drawings or Table 1 of GB150.2. The tensile and bending performances of the joints should be consistent with the lower requirement of the base metal on both sides.

7.2.5 The welding of low-temperature pressure vessels should strictly control the heat input. Within the range determined in the welding procedure qualification assessment, should select a smaller welding heat input, and the selection of multi-channel welding shall be more appropriate.

7.2.6 The steel stamp of the welder code should be marked at the designated place near the welded joint of the pressure components, or record the steel stamp of the welder code in the welding records which also records the arrangement of the welding seam. Among them, on the corrosion-resistant surfaces of low-temperature pressure vessels and stainless steel pressure vessels, the marking of the steel stamp must not be used.

7.2.7 The technical files of welding procedure qualification assessment should be kept until this procedure qualification is invalid, the test specimens for the assessment of the welding procedure qualification should be preserved for at least 5 years.

7.3 Dimension, shape and appearance of weld seam surface

7.3.1 The weld seam reinforcement e_1, e_2 of Category A and Category B weld joints should be in

accordance with the specifications in Table 3 and Diagram 11.

Table 3 Compliance indexes of weld seam reinforcement for Category A and Category B weld joints

Low-alloy steel material with R_m • 540MPa, Cr-Mo low-alloy steel material				Other steel material, mm			
Single groove		Double groove		Single groove		Double groove	
e_1	e_2	e_1	e_2	e_1	e_2	e_1	e_2
0% – 10%• s and • 3	0 – 1.5	0% – 10%• 1 and • 3	0% – 10%• 2 and • 3	0% – 15%• s and • 4	0 – 1.5	0% – 15%• 1 and • 4	0% – 15%• 2 and • 4

7.3.2 The fillet weld size of Category C, Category D weld joints, if not specified in the drawings, should take the thickness of the thinner weld part. For the fillet weld of the reinforcing pad, when the thickness of the reinforcing pad is not less than 8mm, then the fillet weld size should be equal to 70% of the thickness of the reinforcing pad, and not less than 8mm.

7.3.3 The surfaces of the welded joints should be conducted with visual inspection in accordance with relative standards, there should be no surface cracks, incomplete penetration, incomplete fusion, surface pores, craters, not filled, slags and spatters; the transition between the welding seam and the base metal should be smooth; the outer of fillet welds should be a smooth concave transition.

7.3.4 There should be no undercut on the welded surfaces of the following pressure vessels:

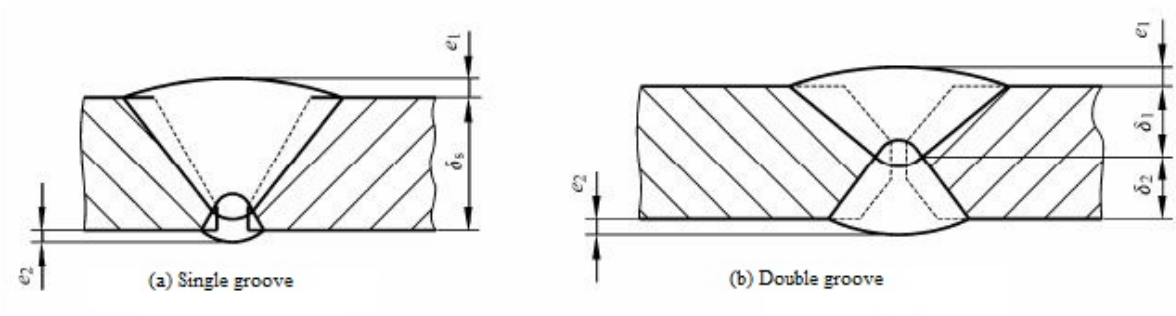

Diagram 11 The weld reinforcement of Category A and Category B weld joints

a) Low-alloy steel pressure vessels with a standard tensile strength lower limit R_m • 540MPa;

b) Pressure vessels made of Cr-Mo low-alloy steel;

c) Pressure vessels made of stainless steel;

d) Pressure vessels bear cyclic loads;

e) Pressure vessels with stress corrosion;

f) Low-temperature pressure vessels;

g) Pressure vessels with weld joint coefficient • as 1.0 (except pressure vessels made of seamless steel

tubes).

The undercut depth of the weld seam surface of other pressure vessels shall not exceed 0.5mm, the continuous length of the undercut shall not exceed 100mm, the total length of the undercut on both sides shall not exceed 10% of the weld seam length.

7.4 Welding repairing

7.4.1 When a weld repair is necessary, then its repair process should be consistent with the relevant provisions in 7.2.

7.4.2 The times of weld repair at the same area should not be more than 2 times. If more than 2 times are required, then before repairing, should have obtained an approval from the technical director of the manufacturing unit, the times of repairing conducted, the location and the repairing situation should be recorded into the quality certificate.

7.4.3 The following pressure vessels after the post weld heat treatment, if need to conduct weld repairing, then the repair areas should be conducted with heat treatment again:

a) Pressure vessels used to contain media with extreme toxicity or high hazard;

b) Cr-Mo steel pressure vessels;

c) Low-temperature pressure vessels;

d) Pressure vessels indicated in the drawings with stress corrosion.

7.4.4 After the heat treatment, any required weld repairing should be with the user's consent. Except the pressure vessels specified in 7.4.3 requires post weld heat treatment, if repairing is conducted after the heat treatment, and when the repair depth is less than 1/3 of the steel thickness $\bullet_s$, and not larger than 13mm, then it does not have to be conducted with post weld heat treatment. When conducting repair welding, should preheat and control the thickness of each welding layer is no greater than 3mm, and the temper bead technique should be used.

When repairing both sides of the same section, the repair depth should be the total of the repaired depth on both sides.

7.4.5 Pressure vessels or pressure components with special corrosion-resistant requirements, the repair area needs to be not less than the original corrosion resistance.

8 Heat treatment

8.1 Heat treatment for the property restore of formed pressure components

8.1.1 When any cold formed steel pressure component meet any one of the following from a) – e) conditions, and if its deformation rate has exceeded the range specified in Table 4, then after the component is formed, a corresponding heat treatment used to restore the properties of the material should be conducted.

a) Pressure vessels used to contain extremely toxicity or highly hazardous media;

b) Pressure vessels indicated in the drawings with stress corrosion;

c) For carbon steel and low-alloy steel, before forming, its thickness is greater than 16mm;

d) For carbon steel and low-alloy steel, before forming, its thinning deduction is greater than 10%;

e) For carbon steel and low-alloy steel which is required to be conducted with impact test.

Table 4 Control index of deformation rate for cold formed parts

Material	Carbon steel, low-alloy steel and other materials	Austenitic stainless steel
Deformation rate (%)	5	15[note]
Calculation of deformation rate: Uni-axial tension (such as cylinder forming, see Diagram 12): deformation rate (%) = 50• [1-(R_f/R_0)]/R_f Bia-axial tension (such as heads forming, see Diagram 12): deformation rate (%) = 75• [1-(R_f/R_0)]/R_f In the formulas: • ---- Thickness of the sheet material, mm; R_f ----- Radius of middle surface after formed, mm; R_0 ----- Radius of middle surface before forming (for flat sheet is•), mm.		
Note: When design temperature is lower than -100°C or higher than 675°C, the control value of the deformation rate is 10%.		

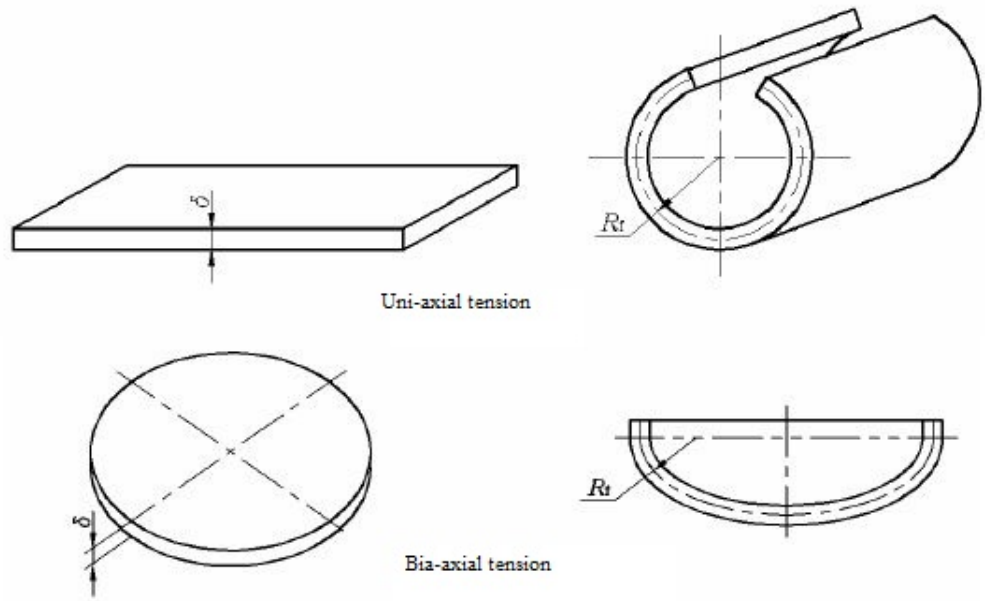

Diagram 12 Uni-axial tension and bia-axial tension forming

8.1.2 When cold forming is completed in steps, if the intermediate heat treatment is not conducted, then the deformation rate shall be the total of the deformation rate of each step; if the intermediate heat treatment is conducted, then the total of the deformation rate before the heat treatment and after the heat treatment should be calculated respectively.

8.1.3 If the deformation residual stress of a warm formed workpiece is required to be eliminated, then

the heat treatment process should be conducted by according to the conditions and requirements for heat treatment of cold formed workpieces specified in 8.1.1.

8.1.4 If the hot forming or warm forming has changed the heat treatment state of the material supplied, then more heat treatment should be conducted again to recover the heat treatment state of the material supplied.

8.1.5 When there is any special requirement on the heat treatment of the forming temperature and the heat treatment state to recover the materials supplied, the procedure should be in accordance with the provisions specified in the relevant standards, regulations or design documents.

8.2 Post weld heat treatment (PWHT)

Pressure vessels and its pressure components should be determined whether a post weld heat treatment is required by according to the materials, the welded joint thickness (the thickness after the post weld heat treatment, $\bullet_{PWHT}$) and the design requirements of the said object.

8.2.1 The thickness of a welded joint shall be determined by according to the following provisions:

a) For equal thickness full penetration butt joints, shall be the steel thickness;

b) For butt welds and fillet welds should be the weld seam thickness;

c) For combined welds should be the greater value of the thickness of the butt weld or the fillet weld;

d) When welding components with different thickness:

----------For unequal thickness butt joints should take the thickness of the thinner steel components;

----------For Category B weld joints such as the shell and tube plate, the flat head, cover, and other similar components should take the shell thickness.

----------When welding the shell and the connection pipes, should take the greater value of the neck thickness of the connection pipe, the shell thickness, the reinforcing pad and the thickness of the connecting fillet welding seam;

----------When welding a flange and the connection pipes, should take the neck thickness of the connection pipe at the joint; for structures which are demonstrated in the Diagram 7-1 g) of GB150.3, should take the flange thickness;

----------For inner heads connecting structures which are demonstrated in Diagram D.12 b) of Appendix D of GB150.3, should take the greater value from the thickness of the cylinder or the head;

---------When welding non-pressure components and pressure components, should take the weld seam thickness.

8.2.2 Where a pressure vessel and its pressure components meet one of the following conditions, a post weld heat treatment should be conducted, the post weld heat treatment should include the connection welding seams between the pressure components as well as the connection welding seam between the pressure components and the non-pressure components. When drawing up the technical requirements for the heat treatment, in addition of meeting the following requirements, some necessary measures to avoid reheat cracking caused by the post weld heat treatment should also be

taken.

8.2.2.1 Where the thicknesses of the welded joints meet the specifications in Table 5;

Table 5 Welded joint thickness in need of conducting post weld heat treatment

Material	Welded joint thickness
Carbon steel, Q345R, Q370R, P265GH, P355GH, 16Mn	> 32mm > 38mm (weld preheating above 100°C)
07MnMoVR, 07MnNiVDR, 07MnNiMoDR, 12MnNiVR, 08MnNiMoVD, 10Ni3MoVD	> 32mm > 38mm (weld preheating above 100°C)
16MnDR, 16MnD	> 32mm
20MnMoD	> 20mm (low-temperature pressure vessels with design temperature not lower than -30°C) Any thickness (low-temperature pressure vessels with design temperature lower than -30°C)
15MnNiDR, 15MnNiNbDR, 09MnNiDR, 09MnNiD	> 20mm (low-temperature pressure vessels with design temperature not lower than -45°C) Any thickness (low-temperature pressure vessels with design temperature lower than -45°C)
18MnMoNbR, 13MnNiMoR, 20MnMo, 20MnMoNb, 20MnNiMo	Any thickness
15CrMoR, 14cR1MoR, 12Cr2Mo1R, 12Cr1MoVR, 12Cr2Mo1VR, 15CrMo, 14Cr1Mo, 12Cr2Mo1, 12Cr1MoV, 12Cr2Mo1V, 12Cr3Mo1V, 1Cr5Mo	Any thickness
S11306, S11348	> 10mm
08Ni3DR, 08Ni3D	Any thickness

8.2.2.2 Pressure vessels indicated in the drawings with stress corrosion.

8.2.2.3 Carbon steel, low-alloy steel pressure vessels used to contain extremely toxicity or highly hazardous media;

8.2.2.4 When otherwise specified in relevant standards or drawings.

8.2.3 For welded joints between dissimilar steels, should be according to the steel with higher requirements on heat treatment to determine whether or not the post weld heat treatment is needed.

8.2.4 When it is required to conduct the post weld heat treatment to austenitic stainless steel, austenite - ferrite stainless steel, the process should be according to the requirements specified in the design documents.

8.2.5 Unless specifically stated in the design documents, otherwise weld joints made of austenitic stainless steel or austenitic-ferritic stainless steel do not have to be conducted with heat treatment.

8.2.6 Post weld heat treatment requirements

8.2.6.1 The manufacturing unit should according to the design documents and standards to formulate

a heat treatment technique before conducting the heat treatment.

8.2.6.2 Coal-fired furnaces shall not be used for post weld heat treatment.

8.2.6.3 Heat treatment unit (furnace) should be equipped with a temperature thermometer which can automatically record the temperature curve, the thermometer should be able to draw the relation curve between the heat treatment time and the wall temperature of the workpiece automatically.

8.2.6.4 Whole post weld heat treatment can be the heating method in a furnace as a whole or the heating method in a pressure vessel. Where possible, the heat method inside a furnace as a whole should be priority; when can not be heated as a whole, then section heating should be permitted. When conducting the section heat treatment, the length where is repeatedly heated should not be less than 1500mm, and insulation measures should be taken at the adjacent areas, in order to ensure that the temperature gradient will not affect the texture and properties of the material. The operating of the heat treatment should comply with the provisions in 8.2.7.

8.2.6.5 For Category B, C, D, E weld joints, spherical heads and cylindrical joints as well as repairing area of welding defects, shall be allowed to use the local heat treatment. The effective heating area of the local heat treatment shall meet the following requirements:

a) Add $\bullet_{PWHT}$ or 50mm on the maximum width of the weld seam on each side respectively, take the greater value;

b) Add $\bullet_{PWHT}$ or 50mm on the direction of the repaired weld end, take the greater value;

c) When welding the connection pipes and the shell, should heat up around the entire circumference of the cylinder including the connection pipes, and in the direction which is perpendicular to the weld seam from the edge of the weld seam to add $\bullet_{PWHT}$ or 50mm, take the greater value.

The effective heating range of local heat treatment should ensure that no harmful deformation can happen, when it is unable to effectively control the deformation, then the heating scope should be expanded, such as carry out heating to the whole circumference of the cylinder; meanwhile, the areas which are near to the heating zone should be conducted with insulation measures, in order to ensure the temperature gradient will not affect the texture and properties of the material.

8.2.6.6 When conducting heat treatment to a composite steel pressure vessel and its pressure components, measures should be taken to ensure that the pressure vessel (especially the properties of the cladding layer material) meets the application requirement.

8.2.7 Procedure for post weld heat treatment

8.2.7.1 The procedure for the post weld heat treatments of carbon steel and low-alloy steel should comply with the following provisions:

a) When the weldment enters the furnace, the furnace temperature must not be higher than 400°C;

b) When the temperature of the weldment has increased to 400°C, the temperature rising rate of the heating zone shall not exceed $5500/\bullet_{PWHT}$°C / h, it must not exceed 220°C / h, and not lower than 55°C / h under normal circumstances;

c) During temperature increasing, the temperature difference within 4600mm length of the heating zone must not be greater than 120°C;

d) During temperature maintaining, the temperature difference between the highest and lowest should not exceed 80°C;

e) During temperature increasing and maintaining, should control the atmosphere of the heating area, to prevent over-oxidation of the weldment surface;

f) When furnace temperature is higher than 400°C, the temperature cooling speed of the heating zone shall not exceed 7000/• $_{PWHT}$°C / h, it must not exceed 280°C / h, and shall not be lower than 55°C / h under normal circumstances;

g) When taking the weldment out of the furnace, the furnace temperature must not be higher than 400°C, the weldment shall be cooled in still air after being taken out of the furnace;

8.2.7.2 The post weld heat treatments for S11306, S11348 ferrite stainless steel should be conducted by according to the requirements in 8.2.7.1. In which, for f) and g), when the temperature is higher than 650°C, the cooling speed must not be greater than 55°C / h, when the temperature is below 650°C, the cooling speed should be fast.

8.3 Heat treatment to improve material mechanical properties

Heat treatments carried out by the manufacturing units of the pressure vessels or pressure components to improve the mechanical properties of the materials, should be conducted on the basis of the heat treatment technique requirements specified in the design documents. The heat treatment for the sample sheet of the base metal should be (or pressure components) in a same furnace with the pressure vessel.

8.4 Other heat treatments

When the use state of the heat treatment of the materials and the state of the heat treatment of the goods supplied are required to be consistent, then the state of the heat treatment of the goods supplied must not be changed, otherwise a reheat treatment should be conducted again.

8.5 Surface treatment before and after heat treatments

The surfaces of any stainless steel and composite steel pressure vessel which has corrosion-resistant requirements, any dirt and harmful media on the stainless steel surface should be removed before the heat treatment. After conducted heat treatment to components made of such materials by according to the requirements specified in the design documents, treatments of pickling and passivation should also be conducted.

9 Test sample and specimen

9.1 Product weld sample

9.1.1 Preparation conditions for specimen of welding product

9.1.1.1 Where a pressure vessel meets one of the following conditions and has Category A longitudinal weld joints, should be prepared for product weld specimen for each unit of product:

a) Pressure vessels used to contain extremely toxic or highly hazardous media;

b) Pressure vessels made of low-alloy steel with the a standard tensile strength as R_m • 540MPa;

c) Low-temperature pressure vessels;

d) During fabrication, steel pressure vessels through heat treatment to improve or restore the material properties;

e) Indicated in the design document, that the pressure vessel is required to be prepared with product weld specimens.

9.1.1.2 Except when it is indicated in the drawings for the preparation of the forensic specimen ring, the Category B weld joints, Category A weld joints connecting spherical heads and cylinders are exempt from preparing product weld specimens.

9.1.2 Requirements for the preparation of the test samples and specimens for product welding.

9.1.2.1 Welding process on the product welding specimen should be conducted on the extension part of the longitudinal seam of the cylindrical segment and on the cylindrical segment at the same time (except spherical pressure vessels).

9.1.2.2 Specimen shall be taken from qualified raw materials, and has the same standard, same trademark, same thickness and the same heat treatment state as the pressure vessel materials.

9.1.2.3 The welding of the specimen should be conducted by the welders of this pressure vessel, using the same conditions, processes and welding technologies (including the welding and the heat treatment conditions after the welding) of the welded pressure vessel. Where a pressure vessels has a requirement for heat treatment, its specimen should go through the heat treatment with the pressure vessel, otherwise measures should be taken to ensure that heat treatment for the specimen is conducted by according to the same heat treatment technologies as the pressure vessel.

9.1.2.4 The size and cutting of the specimen should be according to the provisions specified in JB/T 4744. If an impact test is required, test samples for the impact test should be intercepted from the specimen, and conduct the impact test.

9.1.3 Inspection and evaluation of the specimen

9.1.3.1 The inspection and evaluation of the specimen should be according to the requirements specified in JB/T 4744 and the design documents.

9.1.3.2 When the conduction of a corrosion resistance test is required, should prepare specimen by according to the relative standards and design documents, carry out the test, and meet the requirements. Among which, the detecting susceptibility to intergranular corrosion in stainless steel should be conducted by according to provisions specified in GB/T 21433.

9.1.3.3 For low-temperature pressure vessels, unless otherwise specified, the impact test should include the weld seam metal and heat affected zone, and according to the test temperature and compliance index which are specified in JB/T 4744 and the design documents to carry out inspection and evaluation.

9.1.3.4 Unless otherwise specified, the compliance index of the impact test for weld seam metal of austenitic steel shall be the impact absorbing energy and not less than 31J.

9.1.3.5 When the specimen evaluation results can not meet the requirements, shall be allowed to take samples for reinspection by according to the requirements specified in JB/T 4744. If the reinspection

results still not meet the requirements, then the product represented by the specimen should be regarded as unqualified.

9.2 Base metal heat treatment specimen

9.2.1 Preparation conditions of the specimen for the heat treatment of the base metal

9.2.1.1 When one of the following conditions is met, then specimens for the base metal heat treatment should be prepared:

a) Circumstances where the use state of the heat treatment of the materials and the state of the heat treatment of the goods supplied are required to be consistent, and the state of the heat treatment of the goods supplied is changed during the fabrication process, and requires conducting the heat treatment again.

b) During the fabrication process, circumstances which require heat treatment to improve the mechanical properties of the material;

c) For cold formed or warm formed pressure components, circumstances where, after forming, require heat treatment to restore the material properties.

9.2.2 Preparation requirements of the specimen and test sample for the heat treatment of the base metal

9.2.2.1 The specimen for the heat treatment of the base metal should be together with the base metal specimen in a same furnace to have heat treatment; when the same furnace heat treatment cannot be provided, then a heat treatment state which is the same as the base metal should be simulated.

9.2.2.2 The size of the specimen can be determined by according to the requirements specified in JB/T 4744. The specimens for the heat treatment of the base metal should be one sample for the tensile test, one sample for the cold-bending test and three samples for the impact test.

9.2.3 Specimen inspection and evaluation

The tensile test, cold-bending test and impact test of the specimen should be conducted according to provisions specified in GB/T 228, GB/T 232 and GB/T 229, and according to the requirements specified in GB150.2 and the design documents to carry out evaluation. When the evaluation results of the specimen cannot meet the requirements, then resampling and retest should be permitted. If the retest results are still below standard, then this specimen represented base metal should be regarded be unqualified.

9.3 Forensics ring of the Category B weld joints

9.3.1 According to the provisions specified in the design documents to determine whether or not the forensics ring for the Category B weld joints of pressure vessels are required to be prepared.

9.3.2 Forensics ring shall be taken from qualified materials, and has the same steel grade, same heat treatment state as the materials of the pressure vessel. In the case of forgings, its forging level should also be the same. Where pressure vessels with heat treatment requirement, the forensics ring should also be conducted the same heat treatment.

9.3.3 The type, size, quantity, cutting and the test methods and the results evaluation of the forensic

specimen ring should be in accordance with the requirements specified in the design documents.

9.4 Other sample and specimen

9.4.1 Pressure vessels or pressure components which are required to undertake corrosion resistance tests, should be according to the provisions specified in the design documents to prepare the test samples for the corrosion resistance test and carry out inspections and evaluations.

9.4.2 If according to the requirements in the design documents, any stud is required to undertake the mechanical property test after heat treatment, then test samples for the heat treatment should be prepared as batches and inspection and evaluation carried out. Each batch refers to the same type of studs which are feed at the same time and with the same steel grade, the same furnace tank number, the same section size, the same manufacturing process.

9.5 Specimen combined preparation

Where a pressure vessel is requested to prepare product welding specimen and also the base metal heat treatment specimen, then by ensuring the representation of both situations, the combined preparation of the specimen can be conducted.

10 Non-destructive testing

10.1 Selection of non-destructive testing methods

10.1.1 The butt joints of pressure vessels should be tested by using the techniques of radiographic testing or ultrasonic testing, the ultrasonic testing technique including time of flight diffraction technique (TOFD), recordable ultrasonic pulse reflection technique and the unrecordable ultrasonic pulse reflection technique.

10.1.2 When the unrecordable ultrasonic pulse reflection technique was used for the detection, the radiographic testing technique or the time of flight diffraction testing technique should also be used as an additional local detection.

10.1.3 The surfaces of the weld joints of ferromagnetic pressure vessels should be tested by using the magnetic particle testing technique.

10.2 Implementation time of the non-destructive testing

10.2.1 The weld joints of pressure vessels, after passed the visual inspection on shapes and sizes, appearance, should be conducted with non-destructive testing.

10.2.2 Formed heads should be conducted with non-destructive testing.

10.2.3 Materials having a tendency of delayed crack (such as: 12Cr2Mo1R) should be conducted with a non-destructive testing at least 24h after the completion of the welding, materials having a reheat crack tendency (such as: 07MnNiVDR) should be conducted with one more time of the non-destructive testing after the heat treatment.

10.2.4 Low-alloy steel pressure vessels with a standard tensile strength lower limit R_m • 540MPa, after the pressure test, should also conduct the surface non-destructive testing to the weld joints.

10.3 Radiographic testing and ultrasonic testing

10.3.1 Full radiographic (100%) testing or ultrasonic testing

Where pressure vessels or pressure components meet one of the following conditions, according to the methods specified in the design documents, the full radiographic (100%) test should be conducted or ultrasonic test to Category A and B weld joints:

a) Type III pressure vessels with design pressure greater than or equal to 1.6MPa;

b) Pressure vessels using gas pressure test or gas and hydrostatic combined pressure test;

c) Pressure vessels with weld joint coefficient as 1.0;

d) Pressure vessels which are unable to be conducted with an internal examination after use;

e) Pressure vessels which are used to contain media with extreme toxic or high hazard;

f) Low-temperature pressure vessels with design temperature below -40°C or low-temperature pressure vessels with the weld joint thickness greater than 25mm;

g) The weld joint thickness of austenitic stainless steel, carbon steel, Q345R, Q370R and supporting forgings thicker than 30mm;

h) The weld joint thickness of 18MnMoNbR, 13MnNiMoR, 12MnNiVR and supporting forgings thicker than 20mm;

i) The weld joint thickness of 15CrMoR, 14Cr1MoR, 08Ni3DR, austenitic-ferritic stainless steel and supporting forgings thicker than 20mm;

j) Ferritic stainless steel, other Cr-Mo low alloy steel pressure vessels;

k) Low-alloy steel pressure vessels with a standard tensile strength lower limit R_m • 540MPa;

l) Pressure vessels indicated in drawings to require 100% inspection;

Note: For the above mentioned pressure vessels with butt joints between one connection pipe and another connection pipe with nominal diameter DN • 250mm, the inspection requirements forthe butt joints of the connection pipe and high neck flange are the same as the inspection requirements for Category A and Category B weld joints.

10.3.2 Local radiographic testing and ultrasonic testing

Except for pressure vessels which are not specified in 10.3.1, the Category A and Category B weld joints should be conducted with local radiographic testing and ultrasonic testing. The testing method should be according to the design documents. Among them, the testing length of the low-temperature pressure vessel shall not be less than 50% of the length of all weld joints, the testing length of non-low-temperature pressure vessels shall not be less than 20% of the length of all weld joints, and shall not be less than 250mm.

For the locations listed in following section a) – e), the cross section of the weld seam should be conducted with 100% inspection, among which the testing length of section a), b), c) and the cross-section of the weld seam can be included into the local test length

a) All connection joints on the convex heads which are assembled first formed later;

b) All weld joints which are covered by reinforcement ring, bearing, cushion plate or inner pieces;

c) For connection pipes meeting the requirements with no further reinforcement specified in 6.1.3 of GB 150.3, from the peening centre the minimum length along the surface of the pressure vessel is equal to the weld joints within the range of opening diameter;

d) Butt weld joints between embedded connection pipes and the cylinder or head;

e) The butt joints between the connection pipes which bear external load and with the nominal diameter as DN • 250mm, and the butt joints between connection pipes and the welding neck flanges;

Note: after conducting the testing required by this section, the manufacturing unit is still responsible for the quality of the sections which are not inspected. However, if further testing finds a few pores which are standard defects but do not endanger the safety of the pressure vessel, if such defects are not permitted then the full radiographic (100%) testing or ultrasonic testing should be selected.

10.3.3 The testing requirements for the butt joints between the connection pipes with the nominal diameter as DN • 250mm, and the butt joints between connection pipes and the welding neck flanges should according to the design documents.

10.3.4 The last closed circumferential weld seam between the cylinder of a pressure vessel with diameter not exceeding 800mm and the head, when a single welded but joints with no cushion plate is used, and the techniques of radiographic testing or ultrasonic testing can not be conducted, then testings are permitted not to be carried out, but the closed weld seam shall be subjected to gas welding backing.

10.4 Surface testing

If a weld joint meets one of the following conditions, then an inspection of magnetic particle testing or penetrant testing is required to conduct to the surface of the weld joint according to the method specified in the drawings:

a) For Category A, B, C, D and E weld joints on medium-temperature and low-temperature pressure vessels which are stated in 10.3.1, the surfaces of defects grinding or welding repairing, the cutting marks of the surfaces of demolition places such as clamping and stretching;

b) Category C, D and E weld joints belong to the pressure vessels stated in i), j), k) of 10.3.1;

c) Dissimilar steel weld joints, and weld joints with a tendency of reheat cracking or tendency of delayed cracking;

d) The butt joints and fillet joints of austenitic stainless steel and austenitic-ferritic stainless steel pressure vessels with a steel thickness greater than 20mm.

e) Build-up welding surfaces;

f) Clad weld joints of composite steel sheets;

g) The surfaces defects grinding or weld repairing of low-alloy steel pressure vessels with lower limit of standard tensile strength R_m • 540MPa, and the surface defects grinding or weld repairing of Cr-Mo low-alloy steel pressure vessels, as well as the cutting marks of the surfaces of demolition places such as clamping and stretching;

h) The butt joints between the connection pipes where the Nominal Diameter DN<250mm, and the butt joints between the connection pipes and neck flanges on pressure vessels which require full radiographic (100%) testing or ultrasonic testing;

i) All convex head assembling joints on pressure vessels which are assembled first and formed later and are required for the inspection of local radiographic testing and ultrasonic testing;

j) Pipe angle seams specified in design documents for inspection;

10.5 Combination testing

10.5.1 For all Category A and B weld joints of low-alloy steel pressure vessels with a standard tensile strength lower limit Rm • 540MPa, if the weld joint thickness is greater than 20mm, then a testing technique which is different from the original non-destructive testing technique listed in 10.1 should be used to carry out local testing. This test should include all cross weld areas; meanwhile, after this type of pressure vessels under went the pressure test, non-destructive testing should also be conducted on the weld joints.

10.5.2 For weld joints after undergoing radiographic testing or ultrasonic testing, if any unallowable defects appear, then welding repairs should be conducted after cleaning the defects, and use the original test method to carry out re-examination of these parts until it passes;

10.5.3 For weld joints after undergoing through local inspection, if any unallowable defects appear, then increase the inspection length at the extended part of both ends of the defect. The increased length should be 10% of this weld joint length, and both sides shall not be less than 250mm. If the unallowable defect still exists, then a full inspection should be conducted on this weld joint.

10.5.4 Unallowable defects which are detected by particle testing and penetrant testing, after any necessary grinding and welding, should use the original test technique to carry out retesting of this part until it is satisfactory.

10.5.5 If it is specified by design documents, combination testing should be carried out according to the provisions.

10.6 Technical requirements for non-destructive testing

10.6.1 Technical requirements for radiographic testing

Carry out radiographic testing to weld joints according to JB/T 4730. See Table 6 for its compliance index.

10.6.2 Technical requirements for ultrasonic testing

Carry out ultrasonic testing to weld joints according to JB/T 4730, see Table 6 for its compliance index.

Table 6 Compliance indexes for radiographic testing and ultrasonic testing

Testing method	Test technical grade	Testing range		Compliance grade
Radiographic testing	AB	Category A, B	Full	II

			joints	Local	III
			Fillet joints, T shape joints		II
Ultrasonic testing	Pulse reflection method	B	Category A, B joints	Full	I
				Local	II
			Fillet joints, T shape joints		I
	Time of flight diffraction	/	/		II

10.6.3 Technical requirements for surface testing

Carry out magnetic particle testing, and penetrant testing to weld joints. According to JB/T 473, the compliance index shall not be lower than Grade I.

10.6.4 Technical requirements for combination testing

When a combination test of radiographic testing and ultrasonic testing is used, the quality requirement and compliance grade shall be determined by its own standards respectively, and all should be qualified.

10.7 Non-destructive testing files

The files of non-destructive testing for pressure vessels should be complete, the retention time of these files shall not be shorter than the design service life of the pressure vessel.

11 Pressure test and leak test

11.1 Fabricated pressure vessels shall be subject to a pressure test and leak test according to the design documents.

11.2 During pressure test and leak tests, if the test pressure is measured with a pressure gauge, then two qualified pressure gauges with the same range should be used. The range of the pressure gauges should be 1.5 to 3 times the test pressure, ideally 2 times the test pressure. The accuracy of the pressure gauges shall not be less than Grade 1.6, the dial diameter shall not be less than 100mm.

11.3 The opening reinforcement ring of a pressure vessel should be checked for its weld joint quality with 0.4MPa – 0.5MPa compressed air before tests.

11.4 Pressure test

11.4.1 The pressure test is divided into hydrostatic pressure test, gas pressure test, gas and hydrostatic combined pressure test, according to the method specified in the design documents to carry out the pressure test.

11.4.2 The test pressure and necessary strength of the pressure test should be checked by according to the requirements in GB 150.1

11.4.3 Before the pressure test, the fasteners used to connect the pressure vessel parts should be ensured to be fully equipped and properly fastened; any temporary pressure components fitted

especially for the pressure test, should be ensured of their safety by taking appropriate measures.

11.4.4 The pressure gauges used for the test should be installed at the top position of the pressure vessel under test.

11.4.5 During the pressure test, the pressure must not be continuously increased to maintain a constant pressure. During the test process the pressure components must not be equipped with any pressure fastener or external forces imposed.

11.4.6 Any repair which is carried out after a pressure test, if a pressure vessel repair depth is more than half of the vessel wall thickness, then a re-pressure test should be conducted.

11.4.7 For a pressure test where the multi-cavity pressure vessel is formed by two (or more than two) chambers, the test shall comply with the requirements specified in 4.6.1.7 of GB 150.1 and the design documents.

11.4.8 Jacketed pressure vessels should be conducted with an inner cylinder hydrostatic pressure test, until the test is qualified then welding the jacket, then a hydrostatic pressure test conducted again in the inside of the jacket.

11.4.9 Hydrostatic pressure test

11.4.9.1 Usually use water as the test liquid. After qualifying the test, the water should be drained and the pressure vessel should be blow dried immediately in case water is not able to be completely drained or dried. For austenitic stainless steel pressure vessels, the chloride ion content in the water should be controlled to be no more than 25mg / L.

11.4.9.2 When necessary, other test liquids which will not lead to any hazards may also be used, but the temperature of the liquid during the test should be lower than the flash point or boiling point of the liquid, and some reliable safety measures should also be provided.

11.4.9.3 Test temperature

When conducting hydrostatic pressure test to Q345R, Q370R, 07MnMoVR pressure vessels, the temperature of the test liquid must not be lower than 5°C; when conducting hydrostatic pressure tests to other carbon steel and low-alloy steel pressure vessels, the temperature of the test liquid must not be lower than 15°C; the temperature of the test liquid for low-temperature pressure vessels during hydrostatic pressure test should not be less than the temperature of the impact test for the shell material and the weld joints (take the greater value) plus 20°C. If the nil-ductility transition temperature of the material is increased due to the factor of material thickness, then the test temperature should be appropriately increased.

When it is supported by test data, then a lower temperature liquid can be used to carry out the test, but during the test, the test temperature should be ensured (the metal temperature of the pressure vessel wall) to be 30°C higher than the nil-ductility transition temperature of the wall metal of the pressure vessel.

11.4.9.4 Test procedures and steps

a) Inside the test pressure vessel, any gas should be completely discharged and filled with liquid. During the test process, the observation surface of the test pressure vessel should be kept dry;

b) When the metal temperature of the test pressure vessel wall is near to the liquid temperature, then the pressure can be slowly increased to the design pressure, after confirming that there is no leakage, then continuously increase the pressure to the required test pressure. The time to maintain the pressure should be generally not less than 30min; and then the pressure should be decreased to the design pressure, and maintain the pressure to a sufficient length of time for inspection; the pressure should remain unchanged during the inspection.

11.4.9.5 Compliance criteria for hydrostatic test

During the test process, the pressure vessel has no leakage, no visible deformation and abnormal noise.

11.4.9.6 After completing the hydrostatic pressure test, the liquid inside the pressure vessel should be drained and should use compressed air to blow dry the inside of the pressure vessel.

11.4.10 Gas pressure test, gas and hydrostatic combined pressure test

11.4.10.1 Gas used in the test should be dry and clean air, nitrogen or other inert gases; the provisions for the test liquid and the hydrostatic pressure test should be the same.

11.4.10.2 The gas pressure test and the gas and hydrostatic combined pressure test should be provided with safety measures, the safety administration department of the test unit should send personnel to carry out on-site supervision.

11.4.10.3 The test pressure and the necessary strength check should according to the provisions specified in GB 150.1.

11.4.10.4 The test temperature should be according to the provisions specified in 11.4.9.3.

11.4.10.5 During the test one should increase the pressure slowly to 10% of the required test pressure, maintain this temperature for 5min, and conduct initial inspection to all of the weld joints and connection areas; after confirming no leakage is happening, then continue to increase the pressure to 50% of the required test pressure; if there is no anomaly happening, then increase the pressure as10% of the required test pressure in steps, until the test pressure is reached, then maintain the pressure for 10min; and then decrease to the design pressure, maintain the pressure for a sufficient time for the inspection; during the inspection period, the pressure should remain unchanged.

11.4.10.6 Compliance criteria for gas pressure test and gas and hydrostatic combined pressure test

With regard to the gas pressure test, the pressure vessel should have no abnormal sound, no gas leakage should be detected with the inspection carried out by using liquid soap or other leakage detection liquid, no visible deformation; with regard to the gas and hydrostatic combined pressure test, the outer wall of the pressure vessel should be kept dry, after inspection and confirmed to be no liquid leakage, then use soap liquid or other leakage detection liquid to examine that there is no gas leakage, no abnormal sound, and no visible deformation.

11.5 Leak test

11.5.1 Pressure vessels are required to pass the pressure test before the leak test can be conducted.

11.5.2 The leak test includes airtightness testing, ammonia leak testing, helium leak testing and halogen leak testing. The leak test should be conducted by according to the methods and requirements

specified in the design documents.

11.5.3 Airtightness test

11.5.3.1 The gas used for the airtightness test should be consistent with the provisions in 11.4.10.1.

11.5.3.2 The test pressure of the airtightness test should be the design pressure of the pressure vessel.

11.5.3.3 The test pressure should be increased slowly, it should be maintained for a sufficient length of time when it has reached to the required pressure, and leakage detections conducted for all weld joints and connections areas. Small size pressure vessels can also be immersed in water for detection.

11.5.3.4 During the test process, if no leakage was detected, then the pressure vessel shall be regarded as qualified; if any leakage was detected, then the pressure vessel should be retested after repairing.

11.5.3.5 Other requirements of the airtightness test should be according to the relevant standards and provisions.

11.5.4 Other leak testing methods and requirements should also comply with the relevant standards.

12 Layered pressure vessel

The fabrication of layered pressure vessels, apart from meeting the other relevant provisions of this standard, also should meet the following requirements.

12.1 Forming and inner cylinder

12.1.1 The forming tolerances of the inner cylinders of wrapped pressure vessels (Including wrapped layered cylindrical segment, wrapped layered cylindrical entirety), flat-steel ribbon wound pressure vessels should be consistent with the specifications stated in Table 7.

Table 7 Forming tolerances for the inner cylinders of wrapped pressure vessels and flat-steel ribbon wound pressure vessels

Forming tolerances, mm		
The align deviation value b of Category A weld joints (see Diagram 3)	Edge E formed at Category A weld joints (see Diagram 5)	Difference between the maximum diameter and minimum diameter of a same section (see Diagram 9)
• 1.0	• 1.5	• 0.4%D_1, and • 5

12.1.2 The forming tolerances of single-layered shrink fit cylinder pressure vessels

12.1.2.1 After a single-layered cylinder is formed, it should be divided along its axis into three sections as the upper section, middle section and lower section to measure the internal diameter. The difference between the maximum diameter and minimum diameter of a same section should be less than 0.5% of the inner diameter of the cylinder.

12.1.2.2 The linearity of a single-layered cylinder should be measured using a straight ruler which is not shorter than the length of the cylinder. Against the ruler on the cylinder tube wall along the axial direction, the clearance between the ruler and the cylinder wall shall not be greater than 1.5mm.

12.1.2.3 The surfaces of Category A weld joints are required to be machined or ground out, any weld reinforcement, unfitness, undercut are not allowed to be retained, and make sure the roundness at the joint area is consistent with the cylinder body. Use an inner sample sheet or outer sample sheet with a chord length which is equal to 1/3 of the inner diameter of this single-layered cylinder, and not less than 300mm (see Diagram 5); the formed E edges should be consistent with the specifications indicated in Table 8.

Table 8 E edge tolerance for the single-layered cylinder of shrink fit pressure vessels

E edge, mm	• 1.50	1.50 > E • 0.75	1.25 > E • 1.00	1.00 > E • 0.75	0.75 > E • 0.50	0.50 > E • 0.20	< 2.0
The arc length of the E edge/ The circumference of the shrink fit surface, %	0	3	4	5	6	7	Excluding

12.1.3 The assembly tolerances of the inner cylinders of wrapped layered cylindrical entirety pressure vessels and flat-steel ribbon wound pressure vessels

12.1.3.1 The align deviation value b (see Diagram 3) of Category B weld joints between the inner cylinders should not exceed 1.5mm; the connection between the cylinder and the end flange or the head, its align deviation value should not exceed 1.0mm.

12.1.3.2 The E edge formed on the axial by the Category B weld joints of an inner cylinder (see Diagram 6), should be checked by using a ruler with a length not less than 300mm, the E value shall not be greater than 1.5mm.

12.1.3.3 The linearity tolerance of assemble inner cylinder shall not be more than 0.1% of the cylinder length, and shall not be greater than 6mm.

12.1.4 Welding and heat treatment of inner cylinder

12.1.4.1 Inner cylinder or assemble inner cylinder shall not have any undercut.

12.1.4.2 The outer surfaces of Category A, B weld joints of inner cylinders or assemble inner cylinders shall be machined or ground, to ensure a smooth transition of the surfaces and the base metal surfaces.

12.1.4.3 For the Category A weld joints of carbon steel and low-alloy steel inner cylinders of wrapped pressure vessels, the Category A and B weld joints of carbon steel and low-alloy steel inner cylinders of flat steel ribbon wound pressure vessels should be conducted with post-weld heat treatments.

12.2 Assembly

12.2.1 Sheet wrapping

12.2.1.1 All rust, grease and other debris which is on the outer surfaces of the inner cylinder, wrapped sheets or sheets to be used for wrapping should be removed before conducting the wrapping process.

12.2.1.2 The longitudinal weld joints of the inner cylinder and the Category C weld joints of each layer sheet should be staggered evenly; the circumferential weld joints of wrapped layered cylindrical entirety pressure vessels and the circumferential weld joints of each sheet layer should be staggered evenly, and the minimum distance between the circumferential weld joints of two adjacent sheet layers should be greater than the design requirements.

12.2.1.3 Before wrapping the next layer of sheet, one should grind and smooth the welding seam of the previous sheet.

12.2.1.4 After grinding, one should conduct visual inspection to the weld joints on the sheets; there must be no cracks, undercut, and intensive air holes.

12.2.1.5 After sheet wrapping, one should carry out loose area checking. With regard to a pressure vessel with the internal diameter of its inner cylinder D_i • 1000mm, for each loose area along the circumferential, the length shall not exceed 30% of the D_i, along the axial the length shall not exceed 600mm; with regard to a pressure vessel with the internal diameter of its inner cylinder D_i> 1000mm, for each loose area along the circumferential, the length shall not exceed 300mm, along the axial the length shall not exceed 600mm.

12.2.1.6 On the sheets of each multi-layered cylindrical segments, there should be according to the design, requirements to process leakage detection holes.

12.2.1.7 For the connections between each sheet of a wrapped layered cylindrical entirety pressure vessel and an end flange or head, the align deviation value shall not be larger than 0.8mm.

12.2.2 Shrink fitting

12.2.2.1 Before operating the shrink fitting, a sandblasting treatment or a shot peening treatment should be conducted to each single-layered cylinder, to remove rust, grease and the integration effective debris between layers.

12.2.2.2 The selection of the heating temperature for shrink fitting operation, should give priority to not affecting the properties of the steel material. The shrink fitting operation should rely on the weight of the cylinder to fit into each other, any forceful push down shall not be allowed.

12.2.2.3 During shrink fitting, the Category A joints of each single-layered cylinder should mutually stagger; the stagger angle shall not be smaller than 30°.

12.2.2.4 Except for the inner cylinder, each one of the shrink fitting cylinders should be drilled with relief holes according to the design requirements.

12.2.2.5 After the grooves on both ends of the shrink fitting cylinder are processed, use a feeler gauge to check the gap of the shrink fitting surfaces. Any one gap area with a radial gap size of 0.2mm must not be greater than 0.4% of the area of the shrink fitting surface; for any gap with a radial size of more than 1.5mm, welding repair should be conducted.

Note: Radial gap size refers to the maximum thickness of a feeler gauge which can be squeezed into the gap; Gap area refers to the product of the gap depth along the cylinder axis and the arc length of the gap.

12.2.3 Flat steel ribbon winding

12.2.3.1 After preparation of cylinders for flat steel ribbon wound pressure vessels is completed, the cylinders shall undergo a leak test according to the provisions in 11.5; after passing the leak test the flat steel ribbon winding can be carried out. The leak test pressure shall not be greater than the formula (1) calculated value:

$$P_{Ti} = [\bullet]_i \frac{\bullet_i}{R_i} \quad \text{.....(1)}$$

In which: P_{Ti} ------- The leak test pressure for the inner cylinder, Mpa;

$[\bullet]_i$ ----------The allowable stress of the inner cylinder material under test temperature, Mpa;

$\bullet_i$----------The wall thickness of the inner cylinder, mm;

R_i----------The inner radius of the inner cylinder, mm;

12.2.3.2 Before winding flat steel ribbon, all rust, grease and debris should be removed from the outer surfaces of the inner cylinder and steel ribbons.

12.2.3.3 The winding process of each layer of the flat steel ribbons should be conducted according to the design-specified wound angle and pre-tensile stress, and recording the force measurement device readings. During the winding process of the flat steel ribbons, one should measure and record the actual thickness of the steel ribbon of each layer, and ensure the actual total thickness of every layer of the steel ribbons is greater than the design thickness of the steel ribbon layers, otherwise one should increase the layers of steel ribbons.

12.2.3.4 Among the same layer of steel ribbons, the spacing between any adjacent steel ribbons should be evenly distributed and less than 3mm, and must not cut any sides of a steel ribbon for reasons of uneven spacing.

12.2.3.5 After each layer of the steel ribbon is wound, a loose area inspection should be carried out. The loose area on each steel ribbon shall not exceed 15% of the total area of this steel ribbon.

12.2.3.6 The beginning and ending of each steel ribbon layer should be tightly packed with the previous layer, and the ends of the steel ribbon should be welded for a length which is double the ribbon width, in order to strengthen and tighten the ribbon spacing. The welding seam of the steel ribbon ends of each layer should be ground smooth, and use a 5 times magnifying glasses to carry out inspection to the appearance of the welding seam, to check there are no defects such as undercuts, intensive air holes, slag or cracks. When necessary, a magnetic particle testing or penetration testing can be conducted.

12.2.3.7 Steel ribbons shall be allowed for an angle of 45° trimming for butt splicing, the splicing length of a steel ribbon must not be shorter than 500mm, each ribbon should be allowed for one splicing only, and each layer of winding steel ribbon should not have more than three splicings. The splicing joints should use full penetration structure, before splicing one should carry out welding procedure qualification assessment according to JB/T 4708. After splicing, the welding seam should be ground to be level with the steel ribbons.

12.3 Heat treatment

12.3.1 On the multi-layered pressure vessels, all kinds of the weld joints which are welded together with the wrapping cylindrical segments, may not have to undergo a post weld heat treatment after welding.

12.3.2 Shrink fitted cylinders should be conducted a stress relief heat treatment, this process should be allowed to be conducted with the post weld heat treatment as a combination treatment.

12.4 Test sample and specimen

12.4.1 The product welding specimen of wrapped layered cylindrical segment pressure vessels should include an inner cylinder welding specimen and sheet layer welding specimen. The welding specimen of the sheet layer should be welded at the extended part of the longitudinal joints (Category C) of a layer. At the seam root of the sample, a pad sheet which is the same material as the sheet layer and has the same thickness as the sheet layer should be provided.

12.4.2 The inner cylinders of wrapped layered cylindrical entirety pressure vessels, flat steel ribbon wound pressure vessels (except inner cylinders made of steel pipes) should be prepared with product welding specimen.

12.5 Non-destructive testing

12.5.1 The splice joints of the sheet layer of the Category A weld joints of the inner cylinders of wrapped layered cylindrical segment pressure vessels, the Category A weld joints of the single-layered cylinders of shrink fit pressure vessels, the Category A and Category B weld joints of the inner cylinders of wrapped layered cylindrical entirety pressure vessels, the welded joints connecting each layer of sheets and the end flanges or spherical heads, the longitudinal and circumferential welded joints of the sheet at the most outside layer, the Category A and Category B weld joints of the inner cylinders of flat steel ribbon wound pressure vessels, all of the above mentioned weld joints should be conducted with a full (100%) radiographic testing or ultrasonic testing, and shall conform to the provisions in 10.6.

12.5.2 The Category C weld joints of the sheet layers of multi-layered pressure vessels with a standard tensile strength lower limit Rm • 540MPa, the surfaces of the weld joints should be conducted with 100% of magnetic particle testing or penetrant testing, and shall conform to the provisions in 10.6.

12.6 Pressure test and leak test

12.6.1 The pressure test and final leak test of multi-layered pressure vessels should be consistent with the requirements in Chapter 11 and the design documents.

12.6.2 The pressure test for flat steel ribbon wound pressure vessels should meet the requirements in 11.4, but also in the pressure test, at a location of 800mm from the welding seams of both ends of the most outside layer steel ribbon, and the central of the cylinder to measure the cylinder circumference.

Take two sets of measurements during the test process, the first set is the measurements of 3 locations taken under a zero pressure state before the pressure test; the second set is the measurements of 3 locations after the required test pressure is obtained and maintained for at least 5 minutes during the pressure test; calculate the average (e_m) of the actual measured circumference elongation at the 3 locations, and compare to the theoretical circumference elongation e_{th} of the single-layered same size cylinder use calculated by using the following formula. When the ratio between e_m and e_{th} is within the range of 0.6–1.0, then it should be regarded as passed.

Calculation of the circumferential theoretical elongation e_{th} of a same size single-layered cylinder:

$$e_{th} = \frac{10.68 R_0 P_t R_i^2}{E_m (R_0^2 \bullet R_i^2)} \quad \text{.....(2)}$$

In which:

e_{th} ------- the circumferential theoretical elongation of a same size single-layered cylinder, mm;

R_0----------The external radius of the pressure vessel cylinder, mm;

P_T----------The pressure of the pressure test of the flat steel ribbon wound pressure vessel, MPa;

R_i----------The internal radius of the pressure vessel cylinder, mm;

E_m---------The elastic modulus of the materials under the temperature of the pressure test, Mpa;

12.6.3 After a flat steel ribbon pressure vessel qualified the pressure test and leak test, a weld protection shell should be provided by according to the design requirements.

13 Requirements for pressure vessels leaving factory

13.1 Documents for leaving factory

13.1.1 The manufacturing unit should provide documents for the product leaving factory to the purchasers of the pressure vessels; where there is any special requirements regarding to the use of the pressure vessels, a user's manual should also be provided.

13.1.2 The documents for leaving factory should at least include the following information:

a) The pressure vessel completion plan;

b) The product quality certificate of the pressure vessel (including product data table);

c) Product quality testimony documents (including the quality certificate of the materials for main pressure components, materials list, the quality testimony documents of the heads and forged parts, quality plan and inspection plan, structure and size inspection report, welding record, non-destructive testing report, heat treatment report and automatically recording curves, pressure test report and leak test report, fabrication documents relative to risk prevention and control, the on-site group welding of the group weld pressure vessels, and the technical information on quality inspection etc.);

d) The rubbing copy and photocopy of the nameplate;

e) Manufacturing supervision and inspection certificate for special equipment (for pressure vessels which require supervision and inspection);

f) Pressure vessel design documents (including the strength calculation report or the stress analysis report, the risk assessment report formulated by according to the relevant requirements, as well as other necessary design documents.)

13.2 Nameplate

13.2.1 The nameplate of a pressure vessel should be fixed at a clearly visible location, but the nameplate of a low-temperature pressure vessel cannot be directly housed onto the shell.

13.2.2 A nameplate should include at least the following information:

a) Name of the product;

b) Name of the manufacturing unit;

c) License No,/Grade of the manufacturing unit;

d) Product standard;

e) Main body materials;

f) Medium name;

g) Design temperature;

h) Design pressure or maximum allowable working stress (when it is necessary);

i) Pressure of the pressure test;

j) Product serial number;

k) Equipment code;

l) Manufacturing date;

m) Pressure vessel type;

n) Volume (heat exchange area);

13.3 Coating and packing for pressure vessels transport

The requirements on coating and packing for pressure vessels transport should not only meet the provisions in JB/T4711, but also should be consistent with the requirements in the design documents.