ICS 23.020.30

National Standard of the People's Republic of China

GB 150.1 - 20xx
Replaces Part of GB 150 - 1998

Pressure Vessels
Part 1: General Requirements

(Draft for approval)

Issue Date: 20XX – XX – XX

Implementation Date: XX0XX – XX – XX

Issued by the General Administration of Quality Supervision, Inspection and Quarantine of the People's Republic of China

Table of contents

Foreword

GB 150 Pressure Vessels consists of the following four parts:
----Part 1: General requirements
----Part 2: Materials
----Part 3: Designs;
----Part 4: Fabrication, inspection and testing, and acceptance.

This part is Part 1 of GB 150. The draft procedure of this Part is in accordance with the provisions specified in GB /T 1.1 – 2009 Directives for standardisation.

This part replaces some part contents of GB 150 – 1998 Steel pressure vessels (Chapter 1 ~ Chapter 3, Appendix B and Appendix C), compares with GB 150 – 1998, the main technical change are as below:

a) Expanded the applicable scope of the Standard.

---- By means of reference standards, it is applicable to pressure vessels made of metal materials;
---- Under the premise of meeting the design guidelines of this Standard, it specifies design methods to deal with circumstances exceeding standard scopes;
---- It specifies the basis Standards for all kinds of structure vessels;

b) Amended the requirements on the qualifications and responsibilities of the vessel construction participants.

---- Specifies the storing period for the design documents;
---- Added the responsibilities of the user or design-trustor in providing the written design conditions at the design stage;
---- Specifies the responsibilities of the inspectors from inspection institution on the report confirmation and testimony of the confirmatory burst test.

c) Amended the safety factors for determining allowable stress.

---- Adjusted the safety factor of tensile strength from 3.0 to 2.7;
---- Adjusted the safety factor of yield strength of carbon steels and low-alloy steels from 1.6 to 1.5.
---- For austenitic stainless steel, one can use Rp1.0 to determine the allowable stress.

d) Added conformity declarations to meet the basic safety requirements prescribed in the safety technical regulations for special equipment.

e) Added implementation details of the design methods in addition to adoptive standards and regulations.

f) Added the requirements of the risk evaluation at the design stage for pressure vessels and its implementation details.

This Standard was proposed and formulated by China Standardisation Committee on Boilers and Pressure Vessels (CSCBPV).

The organisation responsible for the drafting of this Standard is:
China Special Equipment Inspection and Research Institution (CSEI).

The organisations participated in the drafting of this Standard are:
Bureau of Safety Supervision of Special Equipment of AQSIQ;
Zhejiang University;
Hefei General Machinery Research Institute;
SINOPEC Engineering Incorporation;
East China University of Science and Technology;
Lanpec Technologies Limited.

The main drafters of this Standard are: Shou Binan, Chen Gang, Zheng JinYang, Chen XueDong, Yang GuoYi, Xie TieJun, Li ShiYu, Xu Feng, Wang XiaoLei, Li Jun, Qiu QingYu, Zhang YanFeng, Wu QuanLong.

This Standard replaces the previous versions: GB 150 – 1989, GB 150 – 1998.

The China Standardisation Committee on Boiler and Pressure Vessels (CSCBPV) is responsible for the interpretation of this Standard.

Introduction

The China Standardisation Committee on Boilers and Pressure Vessels (CSCBPV) (hereinafter refereed to as the Committee) is approved and established by the Standardisation Administration of the People's Republic of China (SAC) in accordance with the Standardisation Law of PRC China. The Committee is a national technical work organisation which is specialised in boilers, pressure vessels and pressure piping, and is responsible for the technical jurisdiction and standardisation work of the above mentioned field. The Committee is under direct jurisdiction management of the SAC for its National Standard professional work, and under jurisdiction management of the National Energy Administration for its Industrial Standard professional work.

This Standard is one of the major common technical standards which is formulated and centralised by the Committee for pressure vessels, so as to regulate all technical requirements relevant to the design, fabrication, inspection and acceptance of all pressure vessels constructed or used in China.

The technical terms of this Standard include all mandatory requirements, all specific restrictive provisions as well as all recommended terms which should be followed during the construction process (that is the works on the design, fabrication, inspection and acceptance) of pressure vessels. Among these, the implementation of the recommended terms is not compulsory. As it is neither necessary nor possible for this standard to include all technical details of the construction process of pressure vessels within the applicable scope of the Standard, under the premise of meeting the basic safety requirements specified by regulations, any technical contents which are not specifically mentioned in this Standard should not be prohibited. This Standard must not be used as a technical manual for the construction of any specific pressure vessel, it also can not be used to replace training, engineering experience and project evaluation. Engineering evaluation is defined as any technical evaluation made by technicians with professional knowledge and deep understanding of the application of specifications in connection with specific products. However the engineering evaluation should be consistent with the relevant technical requirements of this Standard, shall not violate the mandatory requirements and the restrictive provisions of this Standard.

This Standard does not preclude any advanced technical methods adopted during the actual engineering designs and construction. However, the engineers who adopted the advanced technical methods should be able to make reliable judgments, to ensure that the technical methods meet the provisions of this Standard, particularly the relevant mandatory design regulations (Such as strength or stability design formula etc.).

The technical methods and technology requirements specified in this Standard are not involved with any Patent. However, the project application of this Standard may involve some particular patents; the user of this Standard shall bear the responsibilities associated with the patent rights.

This Standard neither requires nor prohibits the designers to use computer programs to achieve the analysis or design of the pressure vessels, however, if a computer program is employed to conduct the analysis or design, then – as well as meeting the requirements of this Standard – the following should also be confirmed:

1) The technology consistency assumed in the adopted programs;
2) The adaptability of the design contents from the adopted programs;
3) The correctness of any input parameters and output results of the adopted programs used in the project designs.

The Committee adopted a proposal review system to amend this Standard. Any units or individuals have the right to propose suggestions towards the amendment of this Standards; the proposed amendment suggestions should be filled in on the “Standard Proposal/Inquiry form” (See Appendix G) to submit to the Committee. The Committee carries out examination to the contents of the “Standard Proposal/Inquiry form”, and according to the results of the examination, records the adopted technical content into the next version of the Standard.

The Committee only gives an interpretation of the technical clauses of this Standard. Any query should be submitted to the Secretariat of the Committee in writing, and must provide all required information. Queries which are not directly related to the Standard terms or queries which cannot be understood should be treated as in the category of technical advisory. The Committee has the right to refuse to answer or provide any paid technical services stated in the agreement.

The Committee is responsible for the publicising work of this Standard. The Committee will not bear any responsibility for any consequences occurred from misunderstanding or ambiguity meaning of this Standard during its publicising of other institutions which have not obtained a written authorisation or approval from the Committee.

Pressure Vessels
Part 1: General requirements

1 Scope

1.1 This Standard specifies the general requirements for materials, design, fabrication, inspection and acceptance of pressure vessels. It applies to the construction of metal pressure vessels (hereinafter refereed to as the Pressure Vessels)

1.2 Applicable design pressure of this Standard
1.2.1 For steel Pressure Vessels shall not exceed 35MPa.
1.2.2 For other metal Pressure Vessels shall be determined by according to the corresponding reference Standards.

1.3 Applicable design temperature range of this Standard
1.3.1 Design temperature range: -269°C ~ 900°C.
1.3.2 For steel Pressure Vessels shall not exceed the allowable operating temperature range of the materials listed in GB 150.2.
1.3.3 For other metal Pressure Vessels, shall be determined by according to the allowable operating temperature range of the materials listed in the reference Standards of this Part.

1.4 The structure forms and construction requirements of this Standard applicable steel Pressure Vessels shall be in accordance with the corresponding provisions of this Part and GB 150.2 ~ GB 150.4; Pressure Vessels with specific structures and made of aluminium, titanium, copper, nickel and nickel alloy, as well as zirconium, apart from meeting the relevant requirements of this Standard, should also meet the following corresponding requirements:

a) The applicable scope and construction requirements of tubular heat exchangers shall meet the requirements set out in GB 151.
b) The applicable scope and construction requirements of steel spherical tanks shall meet the requirements set out in GB 12337.
c) The applicable scope and construction requirements of horizontal Pressure Vessels shall meet the requirements set out in GB 4731.
d) The applicable scope and construction requirements of tower Pressure Vessels shall meet the requirements set out in JB/T 4710.
e) The applicable scope and construction requirements of aluminium welded Pressure Vessels shall meet the requirements set out in JB/T 4734.
f) The applicable scope and construction requirements of titanium welded Pressure Vessels shall meet the requirements set out in JB/T 4745.
g) The applicable scope and construction requirements of copper welded Pressure Vessels shall meet the requirements set out in JB/T 4755.
h) The applicable scope and construction requirements of nickel and nickel alloy welded Pressure Vessels shall meet the requirements set out in JB/T 4756.
i) The applicable scope and construction requirements of zirconium Pressure Vessels shall

meet the requirements set out in NB/T 47011.

1.5 The following Pressure Vessels are not within the applicable scope of this Standard

a) Pressure Vessels with design pressure lower than 0.1MPa and vacuum degree lower than 0.02MPa;
b) Vessels under the jurisdiction of the Technical Supervision Regulation for Safety of Transportable Pressure Vessels;
c) Among equipment, the pressure chambers (such as pump casing, outer casing of compressors, outer casing of turbines, hydraulic cylinders etc.) which can be its own system or as components in swivelling or reciprocating movement machinery;
d) Vessels with possible failure risk of neutron radiation damage which exist in nuclear power plants.
e) Vessels heated by direct flame;
f) Vessels with inner diameter (for non-circular sections, refers to the maximum geometric dimensions of the inner boundaries of the sections, such as: diagonals of rectangles and major axes of ellipses) less than 150mm;
g) Glass-lined vessels or vessels which are specified with other national standards or industrial standards in refrigeration and air-conditioning industry.

1.6 Vessel define scope

1.6.1 Vessels connected with external pipelines;

a) The groove end face of the first girth joint of the welded connection;
b) The end face of the first threaded connection joint;
c) The first flange sealing surface of the flange connection;
d) The first sealing surface of any special purpose connector or pipe;

1.6.2 The pressure heads, flat heads and fasters of connection pipes, manholes and hand-holes etc.

1.6.3 The connection welding seam between non-pressure components and pressure components

1.6.4 Non-pressure components such as racks or skirt supports etc. which are directly connected to the vessels.

1.6.5 Excessive-pressure relief devices of vessels (see Appendix B).

1.7 For Pressure Vessels or pressure components, where its structure dimensions cannot be determined in accordance with GB 150.3, the designs of such Pressure Vessels or components may be conducted using the following methods:

a) Confirmatory test analysis, such as the test stress analysis and the confirmatory hydraulic test, the specific requirements shall meet the requirements set out in Appendix C;
b) Use comparable structures which have been in operations to carry out comparative empirical design, the specific requirements shall be in line with the provisions in Appendix D;
c) Use stress analysis which comprises finite element method to conduct calculations and evaluations, the specific requirements shall meet the requirements set out in Appendix E.

2 Normative References

The following documents are absolutely essential to the application of this Standard. For dated reference documents, only the dated versions apply to this Standard; for undated reference documents, the latest versions (including all amendments) apply to this Standard.

GB 150.2 Pressure vessels Part 2: Materials

GB150.3 Pressure vessels Part 3: Design

GB 150.4 Pressure vessels Part 4: Fabrication, inspection and testing, and acceptance

GB 151 Tubular heat exchangers

GB 567 (All parts) Bursting disc safety devices

GB/T 12241 Safety valves – General requirements

GB 12337 Steel spherical tanks

GB/T XXXX Terminologies for pressure vessels - basic terms

JB 4708 Welding procedure qualifications for steel pressure vessels

JB/T 4709 Welding specifications for steel pressure vessels

JB/T 4710 Steel vertical vessels supported by skirt

JB/T 4711 Coating and packing for transport of pressure vessels

JB/T 4730 (All parts) Non-destructive testing for pressure equipment

JB/T 4731 Steel horizontal vessels on saddle support

JB 4732 Steel pressure vessels – designed by analysis (confirmed 2005)

JB/T 4734 Aluminium welded vessels

JB/T 4745 Titanium welded vessels

JB/T 4755 Copper pressure vessels

JB/T 4756 Nickel and nickel alloy pressure vessels

NB/T 47002 (All parts) Explosion welded clad plate for pressure vessels

NB/T 47011 Zirconium pressure vessels

TSG R0004 Technical Supervision Regulation for Safety of Stationary Pressure Vessels

TSG R1001 Design appraisal regulations for pressure vessels and pressure pipes

3 Terms and symbols

3.1 Terms and definitions

The terms and definitions specified in GB/T XXXX and below apply to this Standard.

3.1.1 Pressure

The force vertically applied onto the unit surface area of Pressure Vessels. In this Standard, pressure shall be refereed to as gauge pressure unless specifically indicated.

3.1.2 Operating pressure
Under normal operating conditions, the achievable maximum pressure at the top of Pressure Vessels.

3.1.3 Design pressure
The set maximum pressure at vessel top, together with the corresponding design temperature to be used as the basic design loading conditions of Pressure Vessels, its value shall not be lower than the operating pressure.

3.1.4 Calculation pressure
Under the corresponding design temperature, the pressure used to determine the thickness of the components, including additional loads such as fluid column hydrostatic pressure etc.

3.1.5 Test pressure
When conducting pressure test or leak test, the pressure at the vessel top.

3.1.6 Maximum allowable working pressure (MAWP)
Under a specified corresponding temperature, the maximum pressure allowed to be borne by the vessel top. This pressure is calculated on the basis of the effective thickness of a pressure component of a pressure vessel, taken all loads borne by this component into consideration, the value should be the minimum value.

Note: when the design documentation of a pressure vessel did not specify its maximum allowable working pressure, then the design pressure of this vessel can be considered as the maximum allowable working pressure.

3.1.7 Design temperature
When a vessel is under normal operating conditions, the set metal temperature of its components (the average temperature along the metal section surface of the components). The design temperature and design pressure are both used as the design load conditions.

3.1.8 Test temperature
When conducting pressure test or leak test, the metal temperature of the shell of the pressure vessel.

3.1.9 Minimum design metal temperature
In cases of design, the expected minimum value of the metal temperature of each component under any possible condition for the duration of the vessel operating process.

3.1.10 Required thickness
The thickness calculated according to the corresponding formula of this Standard. When necessary, it should include the thickness (see 4.3.2) required by other loads. For components subjected to external pressure, the required thickness shall be referred to as the minimum thickness which can meet the requirement of stability.

3.1.11 Design thickness

The sum of the required thickness and corrosion allowance.

3.1.12 Nominal thickness
The thickness which comes from the round up the sum of the design thickness and the negative deviation of the material thickness to the standard specification of the material.

3.1.13 Effective thickness
The nominal thickness minus the corrosion allowance and the negative deviation of the material thickness.

3.1.14 Minimum required fabrication thickness
The minimum thickness ensures the design requirements after the fabrication of the pressure components.

3.1.15 Low-temperature pressure vessel
Pressure Vessels made of carbon steel, low-alloy steel, duplex stainless steel and ferritic stainless steel with design temperature lower than -20°C, and austenitic stainless steel vessels with design temperature lower than -196°C.

3.2 Symbols

C ____Additional thickness, mm;
C_1____Negative deviation of the material thickness, according to 4.4.6.1, mm;
C_2____Corrosion allowance, according to 4.4.6.2, mm;
D_i_____The inner diameter of a cylinder or a sphere shell, mm;
E^t_____The elasticity modulus of materials under design temperature, MPa;
p_____Design pressure, MPa;
pT_____The minimum value of the test pressure, MPa;
R_o_____The external radius of a cylinder, mm;
R_m_____The lower limit of the standard tensile strength of materials, MPa;
R_{eL} ($R_{p0.2}$, $R_{p1.0}$) ____The yield strength of materials under standard room temperature (or 0.2%, 1.0% non-proportional extension strength), MPa;
R^t_{eL}($R^t_{p0.2}$, $R^t_{p1.0}$) ____The yield strength of materials under design temperature (or 0.2%, 1.0% non-proportional extension strength), MPa;
R^t_D _____Under design temperature, and after the materials have experienced 100 000 hours fracture, the average value of the rupture strength, MPa;
R^t_n _____Under design temperature for 100 000 hours, the average creep limit when the creep rates of the material is 1%, MPa;
•$_T$_____The stress of the pressure components under test pressure, MPa;
[•]_____The allowable stress of the component materials of pressure vessels under pressure test temperature, MPa;
[•]^t_____The allowable stress of the component materials of a pressure vessel under design temperature, MPa;
[•]^{t}1 ____The allowable stress of the base material under design temperature, MPa;
[•]^{t}2_____The allowable stress of the coating material under design temperature, MPa;
[•]t_{cr}_____The allowable axial compressive stress of a cylinder under design temperature, Moa;
•$_1$ ____the nominal thickness of the base material, mm;
•$_2$_____the thickness of the coating material, corrosion allowance is exclusive, mm;
•$_e$____The effective thickness of a cylinder or a spherical shell, mm;
• ____the coefficient of a welded joint.

4 General requirements

4.1 General rules

4.1.1 The design, fabrication, inspection and acceptance of Pressure Vessels, apart from meeting the provisions of all Parts of this Standard, also shall comply with the State issued relevant laws, regulations and safety technical codes.

4.1.2 The units which design and manufacture Pressure Vessels should establish a sound quality management system and conduct effective operations.

4.1.3 The design and manufacturing of Pressure Vessels which are within the jurisdiction of the Technical Supervision Regulation for Safety of Stationary Pressure Vessels should accept supervisions from the safety supervision institution of special equipment.

4.1.4 The category of Pressure Vessels shall be determined in accordance with the regulations of the Technical Supervision Regulation for Safety of Stationary Pressure Vessels.

4.2 Qualification and responsibility

4.2.1 Qualifications

a) The design units of Pressure Vessels within the jurisdiction of the Technical Supervision Regulation for Safety of Stationary Pressure Vessels should hold the corresponding special equipment designing license;

b) The manufacturer of Pressure Vessels within the jurisdiction of the Technical Supervision Regulation for Safety of Stationary Pressure Vessels should hold the corresponding special equipment manufacturing license;

4.2.2 Responsibilities

4.2.2.1 The responsibilities of the user or the design-trustor

The design-trustor or the vessel user should submit the design specifications (UDS – User's Design Specification) of the pressure vessels to the design units in formal writing, the following contents should be included in the design specification:

a) The main standards and regulations which the vessel design is based on;
b) Operating parameters (including the operating pressure, operating temperature range, liquid level and the load of the connection pipes etc.);
c) The operation location and the natural conditions of the location of the pressure vessels (including the environment temperature, seismic fortification intensity, wind load and snow load etc.);
d) Components and characteristics of the medium;
e) Expected service life;
f) The geometric parameters and nozzle position;
g) Other necessary conditions required by the design.

4.2.2.2 The responsibilities of the design units

a) The design units are responsible for the correctness and integrity of the design documentation;

b) The design documentation should at least include the strength calculation notes, the design drawings, the manufacture technical conditions, the risk assessment report (when it is required by the relevant regulations or design-trustor), installation instructions and maintenance manual are also included when necessary;
c) The general design diagram of the pressure vessels which are within the jurisdiction scope of the Technical Supervision Regulation for Safety of Stationary Pressure Vessels should be stamped with the official stamp of design license for special equipments.
d) The risk assessment report issued by the design units to the vessel users should comply with the requirements in Appendix F;
e) The design units should keep all of the vessel design documentation within the expected service life of the pressure vessels.

4.2.2.3 The responsibilities of the manufacturer

a) The manufacturer of the pressure vessels should conduct the manufacturing process in accordance with the requirements specified in the design documentation, if any modification of the original design is required, the manufacturer should obtain a modification permission from the original design unit in writing, and record the modified sections in detail;
b) Before manufacturing, the manufacturer should draw up complete quality plans, the contents of the plan should include at least the control point of the manufacturing technology, the inspection items and compliance quota of the pressure vessels or components;
c) During the manufacturing process and after the completion of the manufacture, the inspection department of the manufacturer must comply with the regulations of this Standard, drawing up specifications and quality plans to conduct all types of inspections and tests to the pressure vessels, issuing relevant reports and being responsible for the correctness and integrity of the report.
d) After the inspection proves to be qualified, the manufacturer should issue a product quality certificate;
e) The manufacturer should keep the following technical documentation within the expected service life of each vessel product produced by them:
    1) Quality quota;
    2) Manufacturing technology drawings or manufacturing technology card;
    3) Product quality certificate;
    4) The documentations on welding technology and heat treatment technology of the pressure vessels.
    5) In the Standard, the records of inspections and test items which are within the permissible selection for the manufacturer;
    6) During the manufacturing process and after the completion of the pressure vessel manufacturing, all records of inspections, checking and tests.
    7) The original design diagrams and project completion drawings of the pressure vessels.

4.3 General provisions of the design

4.3.1 The design units (designers) of the pressure vessels should carry out the designs strictly in accordance with the vessel design specifications provided by the user or the design-trustor, and should take all possible failure modes which may be occur during the operation of the pressure vessels into consideration, and put forward measures to prevent vessel failures. The calculations on the strength, rigidity and stability of the pressure components of the pressure vessels should meet the provisions specified in GB 150.3 or the reference standards.

With regard to pressure vessels bearing cyclic loading and have successful operation experiences,

after obtaining approval from the technical leader of the design unit, can be designed in accordance with this Standard, and be added fatigue analysis and evaluation by according to the Appendix C of JB 4732, meanwhile should meet the relevant manufacturing requirements.

4.3.2 Loading

The following loading should be taken into consideration during designing.

a) External pressure, internal pressure or the maximum pressure difference;
b) Fluid column hydrostatic pressure, when the fluid column hydrostatic pressure is 5% lower than the design pressure, it can be overlooked;

The following loading should also be considered when it is necessary:

c) The self-weight of a pressure vessel (including internal pieces and fillers etc), as well as the gravity load of the inside contained medium under normal working conditions or the status of pressure test;
d) The gravity loads of the subsidiary equipment and the insulation materials, linings, pipeline, ladders and terraces etc.
e) Wind load, earthquake load and snow load;
f) The reaction forces of the bearings, base rings, skirt support as well as other types of supporting items;
g) The forces of the connecting pipes and other components;
h) The forces caused by the differences of temperature gradient or thermal expansion;
i) The impact loads, including impact load caused by rapid fluctuations, and the reaction forces caused by fluid impact;
j) The force during transporting or lifting.

4.3.3 When determining the design pressure or calculation pressure, the following should be considered:

a) When a pressure vessel is equipped with an excessive pressure relief device, the design pressure of such pressure vessel should be determined in accordance with the provisions in Appendix B;
b) With regard to vessels containing liquefied gases, if the pressure vessels are equipped with reliable cold facilities, then within the specified load coefficient range, the design pressure should be determined on the basis of maximum achievable temperature of the contained medium under working conditions, otherwise shall be determined in accordance with the relevant regulations;
c) With regard to external pressure vessels (such as vacuum vessels, vessels positioned under liquid or vessels buried underground), when determining the calculation pressure, should consider the possible maximum pressure difference between the internal pressure and the external pressure under normal working conditions;
d) When determining the wall thickness of a vacuum vessel, the design pressure should be considered on the basis of external pressure bearing by the vessel. In cases where a safety control device (such as vacuum relief valve) is equipped, the design pressure should be the 1.25 times of the maximum difference between the internal and external pressures or 0.1MPa, whichever is lower; if there is not a safety control device equipped, then it should

be determined as 0.1MPa;

e) For pressure vessels which consist of two or more pressure chambers, such as jacketed pressure vessels, the design pressure of each pressure chamber should be determined separately. When determining the calculation pressure of any common component, the maximum pressure difference between two adjacent chambers should be considered.

4.3.4 Determination of the design temperature

a) The design temperature must not be lower than the achievable maximum temperature of the component metal under working conditions. With regard to the metal temperature under $0^{o}C$, the design temperature must not be higher than the achievable minimum temperature of the component metal;

b) When the metal temperatures of each part of a pressure vessel under working conditions are different, can set up the design temperature of each part separately:

c) The metal temperatures of the components can be determined by the following methods:

   1) From heat transfer calculation;

   2) Measured on the same type of vessels which have been in use;

   3) Determined on the basis of the vessel contained medium temperature and combine with the external conditions;

d) When determining the minimum design metal temperature, one should give full consideration to the effects of the atmospheric environmental low temperature conditions to the metal temperature of the vessel walls. The atmospheric environmental low temperature refers to the minimum value of the average minimum temperature (refers to the sum of the minimum temperatures on each day of that month divided by the number of days of that month) over the years.

4.3.5 For pressure vessels with different working conditions, the vessels should be designed in accordance with the harshest working condition, the combination of different working conditions should also be taken into consideration when necessary, and the drawings or corresponding technical documents, should clearly indicate the values of pressure and temperature under each design condition and working condition.

4.3.6 Additional thickness

The additional thickness should be determined according to formula (1):

$$C = C1 + C2 \qquad (1)$$

4.3.6.1 The negative deviation of material thickness

The negative deviation of the thickness of sheet materials or tube materials should be determined in accordance with the material Standards.

4.3.6.2 Corrosion allowance

In order for the pressure components of pressure vessels to prevent any weakening and thinning from corrosions or mechanical wearing, the corrosion allowance should be taking into consideration, the specific provisions are as below:

a) For components bearing even corrosion or wearing, the corrosion allowance of such components should be determined in accordance with the expected service life of the pressure vessels and the corrosion speed rate (and erosion speed rate) of the medium to the metal materials;

b) When the corrosion level of each component of pressure vessels are different, then different corrosion allowance should be adopted;

c) For pressure vessels made of carbon steel or low-alloy steel and with compressed air or water vapour as the medium, its corrosion allowance shall not be lower than 1mm.

4.3.7 The minimum thickness of vessel walls after forming shall not include the corrosion allowance:

a) For vessels made of carbon steel or low-alloy steel, shall not be less than 3mm;
b) For high-alloy steel vessels, usually not less than 2mm.

4.3.8 The nominal thickness and the minimum required fabrication thickness of a vessel component should usually be indicated on the design drawings.

4.4 Allowable stress

4.4.1 The allowable stress of the materials in this Standard should be selected in accordance with GB 150.2 and corresponding reference standards. According to the specifications in Table 1 to determine the allowable stress of steel materials (bolt materials not inclusive), according to the specifications in Table 2 to determine the allowable stress of the steel bolt materials.

Table 1 Allowable stress value of steel materials (bolt materials not inclusive)

Material	Allowable stress Take the minimum value from following, MPa
Carbon steel, low-alloy steel	$\frac{R_m}{2.7}, \frac{R_{eL}}{1.5}, \frac{R^t_{eL}}{1.5}, \frac{R^t_D}{1.5}, \frac{R^t_n}{1.0}$
High-alloy steel	$\frac{R_m}{2.7}, \frac{R_{eL}(R_{p0.2})}{1.5}, \frac{R^t_{eL}(R_{p0.2})}{1.5}, \frac{R^t_D}{1.5}, \frac{R^t_n}{1.0}$
Titanium and titanium-alloy	$\frac{R_m}{2.7}, \frac{R_{p0.2}}{1.5}, \frac{R_{p0.2}}{1.5}, \frac{R^t_D}{1.5}, \frac{R^t_n}{1.0}$
Nickel and nickel-alloy	$\frac{R_m}{2.7}, \frac{R_{p0.2}}{1.5}, \frac{R_{p0.2}}{1.5}, \frac{R^t_D}{1.5}, \frac{R^t_n}{1.0}$
Aluminium and aluminium-alloy	$\frac{R_m}{3.0}, \frac{R_{p0.2}}{1.5}, \frac{R_{p0.2}}{1.5}$
Copper and copper-alloy	$\frac{R_m}{3.0}, \frac{R_{p0.2}}{1.5}, \frac{R_{p0.2}}{1.5}$
Note 1: For any austenitic high-alloy steel pressure component, when its design temperature is lower than the creep range, and if any micro-scale permanent deformation is permitted, then the allowable stress can be appropriately increased to $0.9R^t_{p0.2}$, but not exceeds $R_{p0.2}/1.5$. This rule does not apply to flanges or situations where any micro-scale deformation can result in leakage or malfunctions. Note 2: If any reference standard permits to adopt $R_{p1.0}$ or $R^t_{p1.0}$, then this value can be used to calculate the allowable stress; Note 3: According to the expected service life to select the limit value of the rupture strength such as 1.0×10^5hours, 1.5×10^5hours, 2.0×10^5hours etc..	

Table 2 Allowable stress of steel bolt materials

Material	Bolt diameter, mm	Heat treatment status	Allowable stress Take the maximum value from the following values, MPa	
Carbon Steel	• M22	Hot rolling, Normalising	$\frac{R_{eL}^{t}}{2.7}$	
	M24 ~ M48		$\frac{R_{eL}^{t}}{2.5}$	
Low-alloy steel, high-alloy martensitic steel	• M22	Quenching and tempering	$\frac{R_{eL}^{t}(R_{p0.2}^{t})}{3.5}$	
	M24 ~ M48		$\frac{R_{eL}^{t}(R_{p0.2}^{t})}{3.0}$	$\frac{R_{D}^{t}}{1.5}$
	• M52		$\frac{R_{eL}^{t}(R_{p0.2}^{t})}{2.7}$	
High-alloy austenitic steel	• M22	Solid solution	$\frac{R_{eL}^{t}(R_{p0.2}^{t})}{1.6}$	
	M24 ~ M48		$\frac{R_{eL}^{t}(R_{p0.2}^{t})}{1.5}$	

4.4.2 When the design temperature is lower than 20°C, select the allowable stress at 20°C.

4.4.3 Allowable stress of clad steel plates

For clad steel plates with its integration rate between the coating clad layer and the base reach to or above Grade B2 plates prescribed in Standard NB/T 47002, during the design calculation, if the strength of the coating clad layer is required to be included, then its allowable stress under the design temperature should be determined by according to Formula (2):

$$[\bullet]^{t}=\frac{[\bullet]_{1}^{t}\bullet_{1}+[\bullet]_{2}^{t}\bullet_{2}}{\bullet_{1}+\bullet_{2}} \quad \text{.....(2)}$$

4.4.4 When earthquake load or wind load is combined with other loads listed in 4.3.2, then the design stress of the components should not be permitted to exceed 1.2 times the allowable stress, its combination requirements should be specified in accordance with corresponding standards.

4.4.5 Allowable axial compressive stress of cylinders

a) On the basis of the external radius R_0 of the cylinder and its effective thickness $\bullet_e$, calculate the A value by according to Formula (3):

$$A=0.094\bullet_{e}/R_{0} \quad \text{.....(3)}$$

b) On the basis of the cylinder material, select the corresponding stress coefficient curve of external pressure (GB 150.3 Chapter 4), according to its temperature line to obtain the B value, within the elastic range (the straight line in the diagram or at its left side), the B value can be calculated by according to Formula (4):

$$B=2AE^{t}/3 \quad \text{.....(4)}$$

c) The allowable axial compressive stress $[\bullet]^t_{er}$ shall be the B value, and not greater than $[\bullet]^t$.

4.5 Classification and coefficient of weld joints

4.5.1 Classification of weld joints

4.5.1.1 The weld joints between the pressure components of pressure vessels are classed as A, B, C and D four categories, such as shown in Diagram 1.

a) The vertical weld joint (the vertical joints of multi-layer weld-shrunk vessels are not included) between the cylinder (including connection pipe) and the conical shell, the girth weld joint between the spherical head and the cylinder, all weld joints between all types of the convex heads and flat heads, or the butt connection joints between the embedded connecting pipes or sockets and the vessel wall body, are all belong to Category A weld joints;

b) The girth joints of the vessel wall body, the joints between the small ends of the corn heads and the connection pipes, the joints between the long neck flanges and vessel wall body or connection pipes, the butt connection joint between the flat cover or tube plate and the cylinder as well as the butt girth joints between the connection pipes, all belong to Category B weld joints, but the weld joints which have been classed in Category A are not included.

c) The non-butt connection joints between spherical-heads, flat covers, tube plates and cylinders, the joints between flanges and vessel wall body or connection pipes, the overlap joints between the inner heads and the cylinders, as well as the vertical joints of multi-layer weld-shrunk vessels, are all belong to Category C weld joints, but the weld joints which are classed in Category A and Category B are not included.

d) The joints between the connection pipes (including manhole cylinders), sockets, reinforcement pad and the vessel wall body belong to Category D weld joints, but the weld joints which are classed in Category A, B, C are not included.

4.5.1.2 The connection joints which connecting non-pressure components and pressure components belong to Category E weld joints, as shown in Diagram 1.

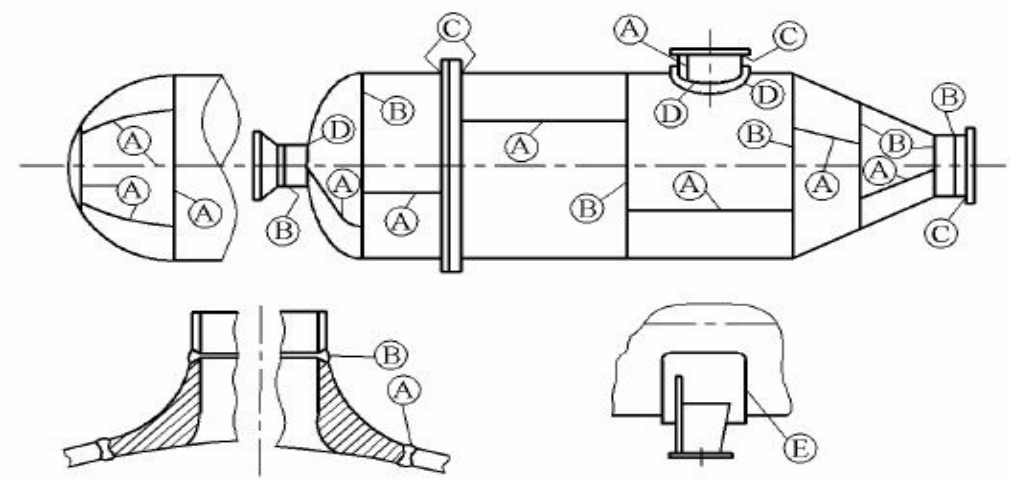

Diagram 1 Classification of weld joints

4.5.2 Coefficient of weld joints

4.5.2.1 The coefficient of a weld joint • should be determined on the basis of the welding form of the butt joints and the length ratio of the non-destructive testing.

4.5.2.2 The coefficients of weld joints for steel pressure vessels are specified as below:

a) Double-sided welding butt joints and full welding butt joints which are equivalent to double-sided welding
   1) Overall non-destructive testing, • =1.0;
   2) Local area non-destructive testing, • = 0.85.

b) Single-sided welding butt joints (along all length of the welding seam, sealed with base metal pad)
   1) Overall non-destructive testing, • = 0.9;
   2) Local area non-destructive testing, • = 0.8.

4.5.2.3 The coefficients of weld joints for other metal materials shall correspond to the provisions in corresponding reference standards.

4.6 Pressure tests

4.6.1 General requirements

4.6.1.1 Pressure tests including: hydrostatic test, gas pressure test, gas and hydrostatic combined test.

4.6.1.2 Pressure vessels are subjected to pressure tests after being produced, the type and requirements of the test, and the test pressure should be clearly indicated in the drawings.

4.6.1.3 The hydrostatic test is usually used as the pressure test; the test liquid should meet the requirements specified in GB 150.4 or relevant reference standards.

4.6.1.4 Pressure vessels not suitable for the hydrostatic test can be tested with gas pressure test or gas and hydrostatic combined test. Pressure vessels subject to gas pressure test or gas and hydrostatic combined test should meet the requirements specified in GB 150.4 or relevant reference standards.

4.6.1.5 When a gas and hydrostatic combined test is adopted, the test liquid and test gas should meet the requirements in 4.6.1.3 and 4.6.1.4 respectively, the test pressure should be in line with the provisions of the gas pressure test.

4.6.1.6 Where external pressure vessels should be conducted pressure test with internal pressure, the test pressure should be according to 4.6.2.3.

4.6.1.7 For any multi-cavity pressure vessel which consists of two or more than two pressure chambers, the test pressure of each pressure chamber should be determined by according to its test pressure, and each pressure chamber is subjected to pressure test respectively.

a) Check the stabilities of the common components under the test pressure.
b) If the stability requirement can not be met, then a leak test should be conducted first. When the leak test has been successful, a pressure test can be conducted. When conducting the pressure test, inside of the adjacent pressure chambers should be maintained a certain pressure, to make sure that during the whole testing process (including the pressure boost, pressure maintaining and pressure relief) at any one moment, the pressure difference of each pressure chamber does not exceed the allowable pressure difference, this requirement and the allowable pressure difference shall be indicated in the drawings.
c) If the test pressure of any cavity is required to be increased, then the provisions in 4.6.3 should be met.

4.6.2 Pressure of pressure test

4.6.2.1 The minimum value of pressure tests meet the provisions in 4.6.2.2 and 4.6.2.3, and take into account the following:

a) When a vertical vessel is horizontally positioned to conduct a hydrostatic test, the test pressure should include the fluid column hydrostatic pressure from when the pressure vessel was tested at its upright position;

b) Under working conditions, if the fluid column hydrostatic pressure of the medium contained inside of the pressure vessel is greater than the fluid column hydrostatic pressure of the hydrostatic test, then one should consider increasing the test pressure.

4.6.2.2 Internal pressure vessels

a) Hydrostatic test:

$$p_T = 1.25p\frac{[\sigma]}{[\sigma]^t} \quad \text{.....(5)}$$

b) Gas pressure test or gas and hydrostatic combined test:

$$p_T = 1.1p\frac{[\sigma]}{[\sigma]^t} \quad \text{.....(5)}$$

Note 1: If a maximum allowable working pressure is indicated on the nameplate of the pressure vessel, then in the formula the design pressure p should be replaced by the maximum allowable working pressure;

Note 2: If the materials of the main pressure components of a pressure vessel, such as the cylinder, head, connection pipes, equipment flange (or hand-hole flange) as well as the fasteners of this pressure vessel are different, then the minimum ratio value [•]/[•]t of each component material should be selected.

4.6.2.3 External pressure vessels

a) Hydrostatic test:

$$p_T = 1.25p \quad \text{.....(7)}$$

b) Gas pressure test or gas and hydrostatic combined test:

$$p_T = 1.1p \quad \text{.....(8)}$$

4.6.3 Stress check for pressure tests

If a test pressure which is greater than the ones prescribed in 4.6.2.2 and 4.6.2.3 is used, then before conducting the pressure test, the stress level of each pressure component under the test condition should be checked, such as for the shell components, should check the maximum overall film stress $•_T$.

a) When conducting the hydrostatic test, then $•_T$ • 0.9 R_{eL} •;
b) When conducting the gas pressure test or gas and hydrostatic combined test, then $•_T$ • 0.8 R_{eL} •;

In the formula: R_{eL} is the yield strength (or 0.2% non-proportional extension strength) of the shell

material at the test temperature.

4.6.4 Relieve of pressure testing
For pressure vessels which cannot be conducted with pressure tests as mentioned above, under the premise of ensuring the safe operation of the pressure vessels, the design unit should put forward safety measures to relieve the pressure tests, after obtaining approval from the technical director of the design unit, the decision should be clearly indicated in the drawings.

4.7 Leak tests
4.7.1 Leak tests including air tightness testing and ammonia leak test, halogen leak test and helium leak test.
4.7.2 For pressure vessels containing a medium with toxicity level classed as extreme toxic, highly toxic or not allowed to have any slight quantity leakages, then a leak test should be conducted after qualified pressure test.
Note: the toxicity level of the medium should be determined in accordance with the relevant regulations of the Technical Supervision Regulation for Safety of Stationary Pressure Vessels.
4.7.3 The design unit should submit methods and technical requirements for the leak tests of the pressure vessels.

4.7.4 Where a leak test is required, the test pressure, test medium and the corresponding test requirements should be indicated in the drawings and the design documents.

4.7.5 The test pressure of the air tightness test should be equal to the design pressure.

4.8 The structural design requirements of weld joints
4.8.1 For steel pressure vessels, the structural designs of the weld joints should meet the requirements specified in Appendix D of GB 150.3.
4.8.2 For other metal pressure vessels, the structural designs of the weld joints should meet the requirements specified in the reference standards.

4.9 Excessive pressure relief device
Pressure vessels within the application scope of this Standard, if there is any excessive pressure happens during the operation process, then an excessive pressure relief device should be fitted in accordance with Appendix B.

Appendix A

(Normative annex)

Conformity Declaration

A.1 The formulation of all Parts of this Standard has followed the general safety requirements specified in the State issued safety regulations for pressure vessels, the design criteria, material requirements, technical requirements on the manufacturing and inspection, as well as the acceptance criteria of the pressure vessels are in line with the corresponding regulations in the Technical Supervision Regulation for Safety of Stationary Pressure Vessels. All Parts of this Standard are harmonised standards, that is all pressure vessels which are constructed according to all Parts of this Standard, are able to meet the general safety requirements which are stated in the Technical Supervision Regulation for Safety of Stationary Pressure Vessels.

Appendix B

(Normative annex)

Excessive pressure relief device

B.1 Scope

B.1.1 During pressure vessel operation, if any excessive pressure occurs, then an excessive pressure relief device (hereinafter referred to as the “Relief Device”) should be provided in accordance with the requirements of this Appendix.

B.1.2 This Appendix applies to Relief Devices fitted on pressure vessels, including safety valves, bursting disc safety devices, assemblies of safety valves and bursting disc safety devices. Relief Devices fitted on the connection pipeline of pressure vessels may consult this Appendix.

B.1.3 This Appendix does not apply to pressure vessels that during operation the pressure may rapidly increase, and its reaction speed reaches to the detonation state.

Note: Detonation (detonation) means that the burning speed of the substance is fast enough to reach to 1000m per second or faster, which produces absolutely different phenomenon from usual deflagration.

B.2 Definition

B.2.1 Actuating pressure

In this Appendix, the actuating pressure refers to the set-pressure of the safety valves or the design burst pressure of the rupture disc.

B.2.2 Set pressure

Under operating conditions, the set pressure for the safety valve to open, it is the gauge pressure measured at the valve inlet. Under this pressure and specified operating conditions, the force created by the medium pressure that can open the valve and at the same time make the force maintained on the valve seat balance with each other.

B.2.3 Design burst pressure

The set up of the design burst pressure is in line with the working conditions of the pressure vessels and the corresponding technical safety specifications, it is the burst pressure value of the bursting disc under the design burst temperature.

B.2.4 Marked burst pressure

It is marked on the nameplate of the bursting disc, under a specified design (or licensed test) burst temperature, when conducting sampling burst test to a same batch of bursting discs, the arithmetical mean value of the actual measured burst pressure.

B.2.5 Manufacturing range

The allowable distribution range of the differences between the marked burst pressure and the relative design burst pressure of the same batch of bursting discs. When a bursting disc takes zero manufacturing range, then the marked burst pressure shall be the design burst pressure.

B.2.6 Minimum marked burst pressure

The algebraic sum of the design burst pressure and the deviation under the manufacturing range.

B.3 General provisions

B.3.1 When a pressure vessel is equipped with Relief Devices, generally the design pressure of the vessel is treated as the initial pressure of the excessive pressure limit.

When the maximum allowable working pressure is marked in the design drawings and nameplates, the maximum allowable working pressure of the pressure vessel can be used to substitute the design pressure, the following are the same.

B.3.2 When vessels are equipped with Relief Devices, the actuating pressure of the Relief Device and the Excessive Pressure Limit should meet the following requirements.

B.3.2.1 When a pressure vessel is equipped with only one Relief Device, then the actuating pressure of the Relief Device should not exceed the design pressure, and the Excessive Pressure Limit should not exceed 10% of the design pressure or 20KPa, whichever is greater.

B.3.2.2 When a pressure vessel is equipped with multiple Relief Devices, then the actuating pressure of one of the Relief Devices should not exceed the design pressure, the actuating pressures of other Relief Devices can be increased to 1.05 times of the design pressure; the Excessive Pressure Limit should not exceed 16% of the design pressure or 30KPa, whichever is greater.

B.3.2.3 When considering the situations where the a pressure vessel may be encountered with fire disaster or come close to any unexpected external heat sources which may lead to danger, then the Excessive Pressure Limit of the pressure vessel should not exceed 21% of the design pressure; such as if the Relief Devices mentioned in B.3.2.1 or B.3.2.2 cannot meet this requirement on Excessive Pressure Limit, then an auxiliary relief device should be installed, to assist the actuating pressure of the Relief Device will not exceed 1.1 times of the design pressure.

B.3.3 Any one of the following circumstances, can be regarded as one pressure vessel, in whichcase only one Relief Device is required to be fitted at the dangerous place (on the pressure vessel or on a pipeline), however when calculating the discharge capacity of the Relief Device, the connection pipeline between pressure vessels should be included:

a) Pressure vessels connected to pressure sources but where the pressure vessels do not generate any pressure by themselves, and the design pressure of such pressure vessels have reached to the pressure of the pressure source;

b) The design pressures over a few pressure vessels are the same or slightly different, the connecting between the pressure vessels are conducted by connection pipes with large enough openings, and there is no block valve fitted between the pressure vessels, or a block valve is used but sufficient measures are adopted to ensure that the block valve is fully opened and sealed during normal operation of the pressure vessels.

B.3.4 In the case of the pressure inside of a pressure vessel happens to be lower than the atmospheric pressure, and when this pressure vessel cannot withstand this negative pressure conditions, then a Relief Device used to prevent negative pressure should be fitted.

B.3.5 Pressure vessels such as heat exchangers, if any high temperature medium happens to leak to low temperature medium and generate steam, then a Relief Device should be fitted at the low temperature area.

B.3.6 When a pressure vessel is required to fit Relief Devices and there are no special requirements, then the safety valves should be preferred.

B.3.7 When one of the following conditions is met, then the safety devices of the bursting discs should be employed:

a) Rapid increase of the pressure (such as increasing the chemical reaction, chemical explosion and the deflagration etc. of the molecular weight).

b) Has higher sealing demands;

c) The substances contained in the pressure vessel will lead to safety valve failure.

d) Other situations where the safety valves cannot be applied.

B.3.8 In order to minimise the expensive media, toxic media, or other hazardous media leaking out through the safety valves, or in order to prevent corrosive gases from the discharge pipeline getting into the inside of the safety valves, the safety valves and the safety devices of the bursting discs can be used in series.

B.3.9 Pressure vessels which are in one of the following conditions, then one or more safety devices for the bursting discs and the safety valves should be used in parallel:

a) To prevent the rapid increase of the pressure in abnormal working conditions;

b) As an auxiliary relief device, when considering encountering with fire disaster or near unexpected external heat source, which requires the discharge area to be increased.

B.3.10 For pressure vessels used to contain explosive media or toxic media with the toxicity level is extreme, highly or moderately hazardous, a conduit should be fitted at the outlet of the Relief Devices, to lead the discharged media to a safe location, and carry out proper dealing method, to prevent the discharged media getting directly into the Atmosphere.

B.4 Safety valves

B.4.1 Safety valves are used for clean, low viscosity media which do not contain any solid particles.

B.4.2 Safety valves cannot be independently used in circumstances with rapid increase of pressure.

B.4.3 Safety valves cannot be independently used in circumstances where the valve seat and valve sealing surface are glued by media or where the media may generate crystals, however the safety device of a bursting disc can be linked to the side of the safety valve inlet to put into combined function.

B.4.4 The common type of the safety valves is a spring loaded safety valve, with full lift safety valves and low lift safety valves two types. Full lift safety valves are suitable for discharging media such as gases, steam and liquefied gas, low lift valves are generally used to discharge liquid media. Self-active non-direct loaded safety valves (pilot safety valves) can also be used.

B.4.5 The nominal diameter of any safety valve used for liquid should be at least 15mm.

B.4.6 The set-pressure deviation of any safety valve should not exceed ± 3% of the set pressure or the greater value of ± 0.015MPa.

B.4.7 When a safety valve is equipped, the design pressure of a pressure vessel should be determined through the following steps:

a) Use the working pressure p_w of the pressure vessel to determine the set-pressure of the safety valve p_z, usually the p_z = (1.05 ~ 1.1) p_w; when p_z <0.18MPa, the ratio value of p_z to p_w can be appropriately increased;

b) The design pressure p of the pressure vessel is equal to or slightly greater than the set-pressure p_z, ie p • p_z.

B.4.8 The relevant technical requirements of safety valves should be in accordance with GB / T 12241.

B.5 Bursting disc safety device

B.5.1 A bursting disc safety device is primarily formed by a bursting disc and a holder. Common shapes of bursting discs are conventional domed, reverse domed and flat.

B.5.2 Bursting disc safety devices are suitable for situations where pressure is rapidly increased, also can be linked with safety valves to protect the performance of the safety valves.

B.5.3 Bursting disc safety devices may not be independently used in situations where the toxic level of medium emission is extreme toxicity, with high degree of hazard or explosive and liquefied petroleum gas etc. On these occasions the safety devices can be used in tandem with safety valves.

B.5.4 When used to discharge liquid medium, a bursting disc safety device which is suitable for media with fully liquid state should be selected.

B.5.5 When pressure vessels are equipped with bursting disc safety devices, then the design pressure of such pressure vessels are determined by the following steps.

a) According to different types of domed metallic bursting discs to determine the minimum marked burst pressure p_{smin} of busting discs, see Table B.1 for the recommended p_{smin} values;

Table B.1 Minimum marked burst pressure P_{smin}

Bursting disc shape	Loading characters	P_{smin}, MPa
Simple conventional domed	Static load	• $1.43p_w$
Slotted lined conventional domed	Static load	• $1.25p_w$
Conventional domed	Pulsating load	• $1.7p_w$
Reverse domed	Static load, pulsating load	• $1.1p_w$

Note: If the designers have mature experience or reliable data, then they do not have to follow the specifications in Table B.1.

b) Select the manufacturing range for the bursting discs, see Table B.2 for the manufacturing range of the bursting discs.

c) Calculate the design burst pressure p_b of the bursting discs, p_b is equal to the Psmin plus the lower limit (absolute value) of the manufacturing range of the selected bursting disc;

d) Determine the design pressure p of the pressure vessel; p should not be smaller than the sum of the p_b and the upper limit of the manufacturing range of the selected bursting disc.

Table B.2 Manufacturing range of bursting discs

Bursting disc classification	Design burst pressure	Full range		½ range		¼ range		Zero range	
		Upper limit (Positive)	Lower limit (negative)	Upper limit (positive)	Lower limit (negative)	Upper limit (Positive)	Lower limit (negative)	Upper limit	Lower limit
Conventional domed	>0.30~0.40	0.045	0.025	0.025	0.015	0.010	0.010	0	0
	>0.40~0.70	0.065	0.035	0.030	0.020	0.020	0.010	0	0
	>0.70~1.00	0.085	0.045	0.040	0.020	0.020	0.010	0	0
	>1.00~1.40	0.110	0.065	0.060	0.040	0.040	0.020	0	0

	>1.40~2.50	0.160	0.085	0.080	0.040	0.040	0.020	0	0
	>2.50~3.50	0.210	0.105	0.100	0.050	0.040	0.025	0	0
	> 3.50	6.00%	3.00%	3.00%	1.50%	1.50%	0.80%	0	0
Reverse domed	• 0.1	0	10.00%	0	5.00%	-	-	0	0
Note: with regard to conventional domed bursting discs, when the design burst pressure is lower than 0.3MPa, the manufacturer and the user (or design unit) may decide a wider manufacturing range which is acceptable by both parties through consultation.									

B.5.6 Materials for bursting disc safety device

B.5.6.1 The materials for bursting disc safety devices is not restricted by the material nameplates in GB 150.2, the bursting disc materials should be compatible with the medium, and should be determined on the basis of the application conditions of the bursting disk and by consultations of the supplier and the user. See Table B.3 for the common materials used for bursting discs and their maximum applicable temperature.

Table B.3 The maximum applicable temperature of bursting discs

Bursting disc material	Maximum applicable temperature, ^{o}C
Pure aluminium	100
Pure silver	120
Pure nickel	400
Austenitic stainless steel	400
Nickel-copper alloy (Monel)	430
Nickel-chromium alloy	480
Nickel chromium molybdenum alloy (Hastelloy)	480
Graphite	200
Note: when the surface of any bursting disc is covered with sealing film or protecting film, the effect from the cover materials to the maximum applicable temperature should be taken into consideration.	

B.5.6.2 For bursting disc safety devices used with corrosive medium or in corrosive environments, and has the possibilities of leading to early efficiency lost of the bursting disc safety devices, the surfaces of the bursting discs should be conducted with anti-corrosion measures such as plating, coating or lining.

B.5.6.3 For the holders, the common materials are pressure vessel materials such as carbon steel, austenitic stainless steel, nickel-copper alloy and nickel-iron-chromium alloy etc. The properties of the materials should be compatible with the media.

B.5.7 The selection and relevant technical requirements of bursting disc safety devices should comply with the provisions in GB 567.

B.6 Combined installation of safety valves and bursting disc safety devices

B.6.1 If a bursting disc safety device is series connected on the inlet side of a safety valve, when the bursting disc bursts, there should be no debris allowed. The area between the bursting disc safety device and the safety valve should be fitted with a pressure gauge, an exhaust outlet and an alarm indicator etc.

B.6.2 If a bursting disc safety device is series connected on the outlet side of a safety valve, then the safety valve should adopt special structure type (such as balance safety valve) to ensure that when accumulated backpressure arises between the safety valve and the bursting disc safety device, the safety valve can still open under the set pressure. Meanwhile, the cavity between the bursting disc safety device and the safety valve should be equipped with exhaust outlet or fluid discharge port.

B.6.3 When a safety valve and a bursting disc safety device are connected as series combination, then the actuating pressure of each individual relief device and the excessive pressure limit of the pressure vessel should meet the requirements in B.3.2.1.

B.6.4 When a safety valve and a bursting disc safety device are connected as a parallel combination, then the actuating pressure of the relief device and the excessive pressure limit of the pressure vessel should meet the requirements in B.3.2.2, in which the actuating pressure of the safety valve should not exceed its design pressure, the actuating pressure of the bursting disc should not exceed 1.05 times its design pressure.

B.7 Calculation of required discharge capacity for pressure vessels

B.7.1 Symbols

A_t --------Heat area of vessel, m^2;

Horizontal vessels with hemispherical heads, $A_t = 3.14D_oL$;

Horizontal elliptical head vessels, $A_t = 3.14Do\ (L + 0.3D_o)$;

Vertical vessels: $A_t = 3.14D_oh_1$;

Spherical vessels, $A_t = 1.57D_o^2$, or take higher value of the external surface area from the ground up to 7.5 m high.

D_o-----The external diameter of a pressure vessel, m;

d-------The inner diameter of the feeding tube of a pressure vessel, mm;

F-------Coefficient.

When a pressure vessel is positioned underground and is covered with sand and soil, then F = 0.6;

When a pressure vessel is positioned on the ground, F = 1.0;

When a pressure vessel is positioned under a spraying device with speed higher than 10L/m^2.min, F = 0.6;

H-------Input heat, kJ/h;

h_1------The maximum liquid level, m;

L-------The total length of a pressure vessel, m;

q--------The latent heat of vaporisation of the liquid under relief pressure, kj/kg;

v-------The flow rate in the feeding tube of a pressure vessel, m/s;

t-------The saturation temperature of the medium under relief pressure, ^oC;

W_s------The required discharge capacity of a pressure vessel, kg/h;

•---------The thickness of the insulation layer of a pressure vessel, m;

•-------The thermal conductivity of the insulation material under normal atmospheric temperature, kJ/m·h· ^oC;

•------The medium density under discharge conditions (set temperature and set pressure), kg/m^3;

B.7.2 The required discharge capacity of pressure vessels containing compressed gases or water steam

a) The safe discharge capacity of pressure vessels such as compressor tanks or steam tanks, take the maximum production (vapor) capacity produced within a unit time by the compressor and the steam generator respectively.

b) The required discharge capacity of gas tanks, should be determined by according to formula (B.1):

$$W_s = 2.83 \times 10^{-3} \rho v d^2 \quad \text{.....(B.1)}$$

B.7.3 When a heat exchanger generates steam, its required discharge capacity should be determined by according to formula (B.2):

$$W_s = H / q \quad \text{.....(B.2)}$$

B.7.4 The required discharge capacity of pressure vessels containing liquefied gases

B.7.4.1 For a pressure vessel where its medium is flammable liquefied gas or its medium is non-flammable liquefied gas but the pressure vessel is positioned in a working condition where possible fire can arise, then the required discharge capacity of such vessel should be separately calculated as the vessel is equipped with or without thermal insulation layer:

a) If without thermal insulation layer, the safe discharge capacity should be determined by according to formula (B.3):

$$W_s = \frac{2.55\times10^5 F A_T^{0.82}}{q} \quad \text{.....(B.3)}$$

b) If with complete thermal insulation layer (for example, in a fire disaster situation, the insulation layer cannot be damaged), the required discharge capacity should be determined by according to formula (B.4):

$$W_s = \frac{2.61\times(650-t)\lambda A_T^{0.82}}{\delta q} \quad \text{….....(B.4)}$$

B.7.4.2 For a pressure vessel where its medium is non-flammable liquefied gas, when the vessel is placed and working in a non-fire danger environment, the safe discharge capacity of this vessel shall be as the vessel is equipped with or without a thermal insulation layer, and calculated by formula (B.3) or (B.4) respectively, take a value which is not lower than 30% of the calculated value.

B.7.5 For a pressure vessel where its gas volume can be increased by chemical reaction, its required discharge capacity should be determined by the possible maximum capacity generated by the chemical reactions inside of the vessel and the reaction time length.

B.8 Calculation of discharge area of relief device

B.8.1 Applicable scope

This section applies to the calculation ofthe discharge area when single-phase media goes through relief devices. When the medium is in liquid state, then during discharge there will not be any flash evaporation happening.

B.8.2 Symbols

A------the minimum discharge area of safety valves or bursting discs, mm^2;

C-------the coefficient of gas characteristics, can consult to Table B.4 or calculate using the following formula:

$$C=520\sqrt{k(\frac{2}{k+1})^{\frac{k+1}{k-1}}}$$

K-------the discharge coefficient of a relief device;

For safety valves, K shall be the rated discharge coefficient (the rated discharge coefficient is usually provided by the manufacturer of the safety valve)

For bursting discs, K is the coefficient which is related to the shape of the inlet pipeline of the bursting disc device; it can be determined by consulting Table B.5, but should still meet the following conditions from a) to d):

a) Emit directly to the atmosphere;

b) The distance from the bursting disc safety device to the vessel body should not exceed 8 times the pipe diameter;

c) The length of the discharge pipe of the bursting disc safety device shall not exceed 5 times the pipe diameter;

d) The nominal diameter of the upper and lower pipes of the bursting disc safety device shall not be smaller than the nominal diameter of the discharge opening of the bursting disc safety device.

When the shape of the inlet pipeline is not easy to determine or does not meet the requirements stated in a) to d), then K= 0.62; with regard to liquid medium, take K as 0.62 or according to regulations specified in relative safety technical codes:

k------the adiabatic exponent, see Table B.6;

M------The molar mass of the gas, kg/kmol;

p_o------The pressure at the outlet side of the relief device (absolute pressure), MPa;

p_f----------The relief pressure (absolute pressure) of the relief device, including the design pressure and excessive pressure limit two parts, MPa;

•p----------The difference between the internal pressure and the external pressure when the relief device is discharging, MPa;

R---------- The common gas constant, J/kmol.K, R = 8314;

R_e----------The Reynolds Number, $R_e = 0.3134\frac{W}{\mu\sqrt{A}}$;

T_f-------The discharge temperature of the relief device, K;

W----------The discharge capacity of the relief device, kg/h;

W_s---------the required discharge capacity of pressure vessel, kg/h;

z----------The compressibility factor of the gas, see Diagram B.1, For air, Z = 1.0;

•----------The correction coefficient of fluid dynamic viscosity, see Diagram B.2, when the viscosity of any fluid is not greater than the viscosity of water, then • = 1.0;

•------The fluid dynamic viscosity, Pa.s;

•---------The medium density under the relief condition (set temperature and set pressure), kg/m^3;

B.8.3 Calculation of the discharge area of individual relief device

B.8.3.1 Gas

a) Critical condition, that is when $p_o / p_f \leqslant \left(\frac{2}{k+1}\right)^{\frac{k}{k-1}}$,

then $A = 13.16 \frac{W_s}{CKp_f} \sqrt{\frac{ZT_f}{M}}$ .....(B.5)

b) Subcritical condition, that is when $p_o / p_f > \left(\frac{2}{k+1}\right)^{\frac{k}{k-1}}$,

then $$A = 1.79 \times 10^{-2} \frac{W_s}{Kp_f \sqrt{\frac{k}{k-1}\left[\left(\frac{p_o}{p_f}\right)^{\frac{2}{k}} - \left(\frac{p_o}{p_f}\right)^{\frac{k+1}{k}}\right]}} \sqrt{\frac{ZT_f}{M}}$$ .....(B.6)

B.8.3.2 Saturated steam

The steam content in saturated steam shall not be lower than 98%, the overheating shall not exceed 11°C.

a) when p_f • 10MPa,

then $$A = 0.19\frac{W_s}{Kp_f}$$ .....(B.7)

b) when 10 MPa < p_f • 22MPa,

then $$A = 0.19\frac{W_s}{Kp_f}\left(\frac{33.2p_f - 1061}{27.6p_f - 1000}\right)$$ .....(B.8)

B.8.3.3 Liquid

$$A = 0.196\frac{W_S}{\varsigma K\sqrt{\rho\Delta p}}$$ .....(B.9)

For viscous liquid, the calculation of its discharge area should be as below:

a) Assume it was non-viscous liquid, take • = 1.0 and use formula (B.9) to calculate the initial discharge area and the corresponding diameter, and round up to the nominal diameter and corresponding discharge area nearest to the product series specifications.

b) On the basis of the calculated and rounded up discharge area value from step a), according to formula (B.9) and • = 1.0 to calculate the discharge capacity W;

c) On the basis of the discharge capacity W calculated from step b), as well as the calculated and rounded up discharge area value from step a), according to formula $R_e = 0.3134\frac{W}{\bullet\bullet\overline{A}}$ to calculate the Reynolds number; determine the • value from Diagram B.2, and on the basis of this • value and according to formula (B.9) to re-calculate the discharge capacity W.

d) If W• W_s, then this diameter (area) shall be the required value; if W < W_s, then use the discharge area corresponding to the nominal diameter of one size up product to replace the calculated and rounded up discharge area value from step a), and repeat the calculations from step b) to step c), until W •W_s.

B.8.4 The actual discharge area of the selected safety relief device shall not be smaller than the minimum discharge area A calculated from B.8.3.

Table B.4 Coefficient C of gas characteristics C

k	C	k	C	k	C	k	C
1.00	315	1.20	337	1.40	356	1.60	372
1.02	318	1.22	339	1.42	358	1.62	374
1.04	320	1.24	341	1.44	359	1.64	376

1.06	322	1.26	343	1.46	361	1.66	377
1.08	324	1.28	345	1.48	363	1.68	379
1.10	327	1.30	347	1.50	365	1.70	380
1.12	329	1.32	349	1.52	366	2.00	400
1.14	331	1.34	351	1.54	368	2.20	412
1.16	333	1.36	352	1.56	369	-	-
1.18	335	1.38	354	1.58	371	-	-

Table B.5 Discharge coefficient of bursting disc safety device

Serial No.	Schematic diagram of connection pipe	Shape of connection pipe	Discharge coefficient k
1		Plug-in type connection pipe	0.68
2	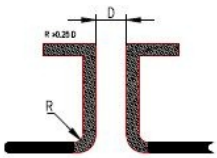	Flat connection pipe	0.73
3		Transitional round corner connection pipe	0.8

Table B.6 Properties of some gases

Gas	Molecular formula	Molar mass M kg/ kmol	Adiabatic exponent Pe MPa (0.013MPa, under 15°C)	Critical pressure Pe MPa (absolute pressure)	Critical temperature Te, K

Air	-	28.97	1.40	3.769	132.45
Nitrogen	N_2	28.01	1.40	3.394	126.05
Oxygen	O_2	32.00	1.40	5.036	154.35
Hydrogen	H_2	2.02	1.41	1.297	33.25
Chlorine	Cl_2	70.91	1.35	7.711	417.15
Carbon monoxide	CO	28.01	1.40	3.546	134.15
Carbon dioxide	CO_2	44.01	1.30	7.397	304.25
Ammonia	NH_3	17.03	1.31	11.298	405.55
Hydrogen chloride	HC1	36.46	1.41	8.268	324.55
Hydrogen sulphide	H_2S	34.08	1.32	9.008	373.55
Nitrous oxide	N_2O	44.01	1.30	7.265	309.65
Sulphur dioxide	SO_2	64.06	1.29	7.873	430.35
Methane	CH_4	16.04	1.31	4.641	190.65
Acetylene	C_2H_2	26.02	1.26	6.282	309.15
Ethylene	C_2H_4	28.05	1.25	5.157	282.85
Ethane	C_2H_6	30.05	1.22	4.945	305.25
Propylene	C_3H_6	42.08	1.15	4.560	365.45
Propane	C_3H_8	44.10	1.13	4.357	368.75
Butane	C_4H_{10}	58.12	1.11	3.648	426.15
Isobutane	$CH(CH_3)_3$	58.12	1.11	3.749	407.15

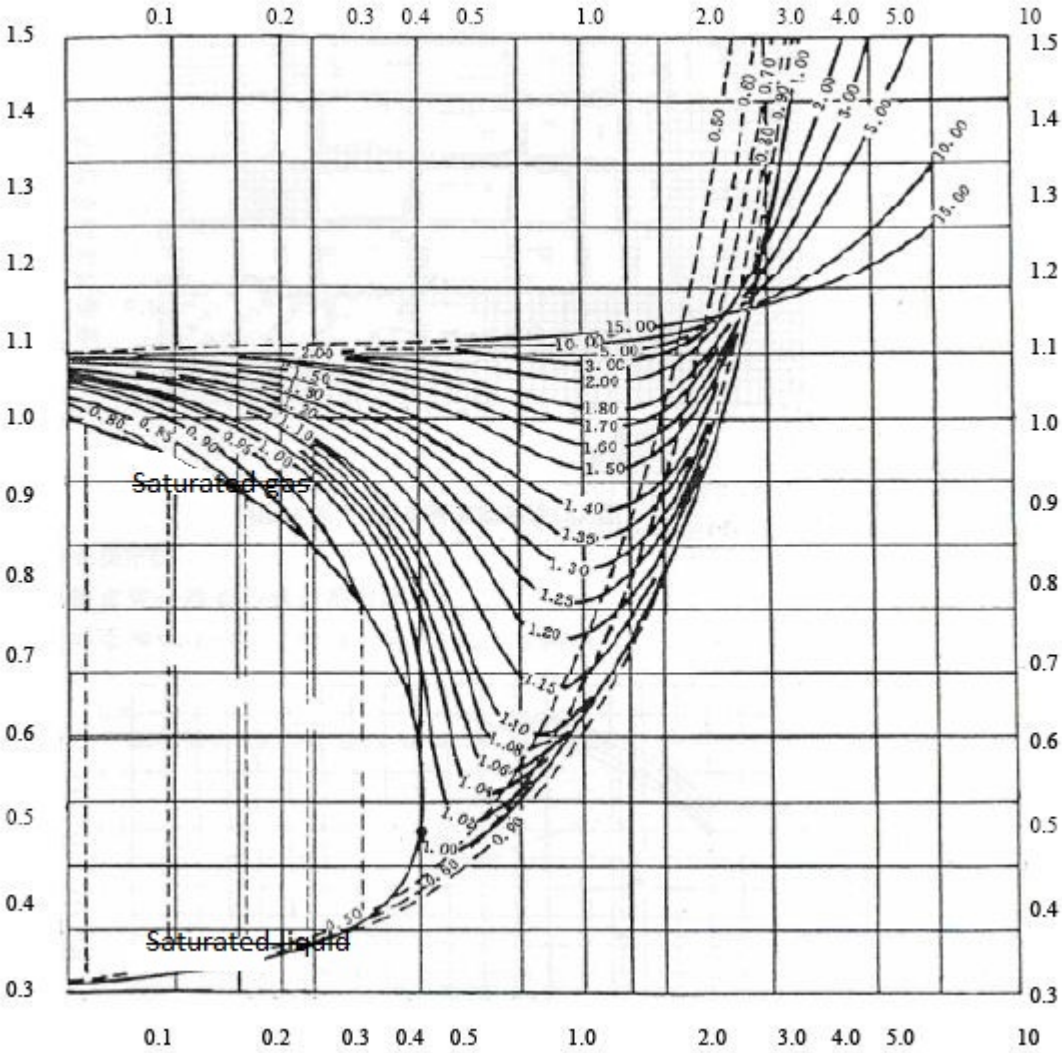

Reduced pressure

Reduced Temperature Tr = Medium relieving temperature (K) / Medium critical temperature (K)

Reduced pressure Pr = Medium relieving pressure (MPa) /Medium critical pressure (MPa)

Diagram B.1 Gas compressibility coefficient

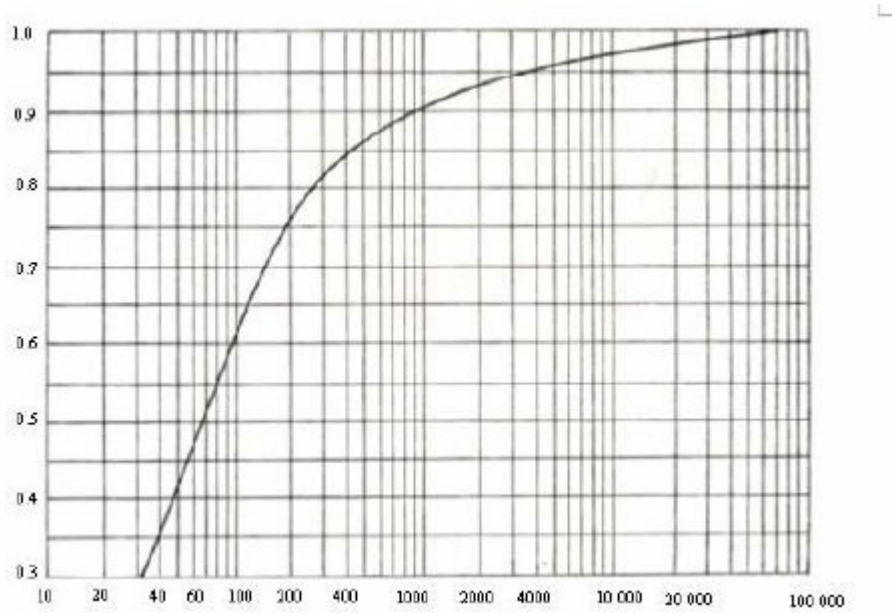

Diagram B.2 Correction coefficient (•) of fluid dynamic viscosity

B.9 Installation of the relief devices

B.9.1 The relief devices should be installed on the vessel body or on the connection pipeline of the pressure vessel where it is easy to install, inspect and maintain. The valve body of the safety valve should be installed at the top of the pressure vessel or pipeline and should be positioned straight up.

B.9.2 The relief devices should be installed at a location near to the stressor of the pressure vessel. If a relief device is used for gas medium, then it should be installed at gas-phase space (including the gas-phase space which is above the liquid) or on the pipeline connected to such space; if the relief device is used for liquid medium, then it should be installed under the normal surface of the liquid.

B.9.3 The cross-section area of all pipes and tubes between the pressure vessel and the relief devices should not be smaller than the discharge area of the relief device; its connection pipe should be short and straight, to avoid generating too much pressure loss. If two or more than two relief devices (spare safety valves are not included) are installed on one connection port, then the cross-section area of the inlet of this connection port should be at least equal to the total sum of the cross-section areas of the inlets of all these relief devices.

B.9.4 Between the pressure vessel and the relief device, usually not suitable to install an intermediate block valve. For pressure vessels requiring continuous operation, between the pressure vessel and its relief devices, can install a block valve specifically for maintenance use. During the

normal operation of the pressure vessel, the block valve should be in a fully open state and is lead sealed.

B.9.5 The supporting structure of the relief devices should have sufficient strength (or stiffness), to ensure it can bear the force generated during the discharging process of the discharge device.

B.10 Discharge pipe

B.10.1 Discharge pipe should be designed in a vertical direction, its port diameter should not be smaller than the outlet diameter of the relief device. If multiple relief devices use a single discharge head pipe, then the cross-section area of the head pipe should not be smaller than the total sum of the cross-section areas of the outlets of relief devices.

B.10.2 If in the discharge pipes there may be some flammable medium to be discharged, then measures such as flame arrester etc. should be installed in accordance with relevant regulations and requirements, to prevent the danger of tempering.

B.10.3 Discharge holes should be set at the appropriate locations of the discharge pipes, to avoid rain, snow and condensate etc to build up in the discharge pipes.

B.10.4 During the process of installing the discharge pipeline of the bursting disc safety devices, the centerline of the discharge pipeline should be aligned with the center line of the bursting disc safety device, to avoid the bursting discs bearing uneven forces.

Appendix C

(Normative annex)

Determination of vessel design pressure by confirmatory burst test

C.1 General provisions

C.1.1 This Appendix specifies the primary requirements by using confirmatory burst test to determine the design pressure of pressure vessels.

C.1.2 This Appendix applies to pressure vessels or pressure components for which the structure design calculations are unable to be carried out by according to GB 150.3. For a pressure component whose required thickness can be correctly calculated by according to GB 150.3, the structural strength design should meet the requirements in GB 150.3, and must not use methods specified in this Appendix.

C.1.3 Pressure vessels and test vessels (or components and test components) should meet the following requirements:

a) Same design structure and shapes;

b) Same materials, that is the corresponding material standards, nameplates and heat treatment status should be consistent;

c) Same nominal thickness and structural dimensions. For structures with same section measurement, its length shall not be longer than the confirmatory test item;

d) Same heat treatment requirements;

e) The manufacturing deviation should meet the requirements in GB 150.4.

C.1.4 If only some of the pressure components of a pressure vessel, have a maximum allowable working pressure determined by using confirmatory burst tests, then the design pressure of this pressure vessel should be determined by according to the requirements of all pressure components.

C.1.5 This Appendix does not apply to the design of pressure vessels used to contain media when the toxicity level is extremely toxic or highly toxic.

C.2 Administration and responsibilities

C.2.1 The manufacturing of the test item for the confirmatory burst test should be completed by the manufacturer of this vessel or pressure components, the test should be conducted by the manufacturer of this vessel or pressure components or an entrusted third party.

C.2.2 The conducting process of this confirmatory burst test should give full consideration to the safety of the test personnel and the test sites, the safety measures on the test procedures and test sites should be approved by the technical leader of the unit conducting the test.

C.2.3 Consult the supervision and inspection requirements of the pressure tests for vessels, the entire test process should accept the testimony of the personnel from the inspection institution, the confirmatory burst test report should be signed and confirmed by the personnel of inspection institution.

C.2.4 Technical review

C.2.4.1 The technical documentation about using confirmatory burst tests to determine the design pressure of a vessel or the maximum allowable working pressure of pressure components are subjected to technical reviews in accordance with Article 1.9 of the Technical Supervision Regulation for Safety of Stationary Pressure Vessels.

C.2.4.2 Requirements of technical documentation

C.2.4.2.1 The documentation on the design and manufacturing of the test item should contain at least the following contents:

a) The structural and design drawing of the test item;

b) The material quality certificates;

c) The technology documents of manufacturing process;

d) The inspection record;

e) Other relevant documents.

C.2.4.2.2 The confirmatory burst test report should include at least the following contents:

a) The test and experimental equipment;

b) The test procedures;

c) The report of the test process;

d) The test conclusion.

C.3 Test requirements

C.3.1 Confirmatory burst test usually uses water as the test medium, the test medium and temperature should be in line with the provisions in GB 150.4.

C.3.2 Before conducting confirmatory burst test to the test vessel, the pressure of the pressure test shall not exceed 1.25 times of the expected design pressure.

C.3.3 The pressure increase for the confirmatory burst test should be carried out slowly, first should gradually increase the pressure to 0.5 times of the expected design pressure, after maintaining the pressure and observing then gradually increase the pressure as 1/10 of the expected design pressure, until the pressure has reached to the expected design pressure, after conducting at least 10 minutes of pressure maintaining and observing, then continuously increase the pressure as 1/10 of expected design pressure to the burst stopping point or set stopping point.

C.3.4 The confirmatory burst test can choose suitable pressure as the stopping point, it will be valid as far as the design pressure calculated by using this stopping point pressure meets the requirement of expected design pressure.

C.4 Determination of design pressure

C.4.1 The maximum allowable working pressure under the test temperature

a) When using C.4.4 to determine R_{mave}, use the formula (C.1) to calculate the maximum allowable working pressure p'' under the test temperature, otherwise use formula (C.2) to calculate:

$$p'' = \frac{p_b R_m \phi}{4R_{mave}} \quad \text{.....(C.1)}$$

$$p'' = \frac{p_b R_m \phi}{4R_{mh}} \quad \text{.....(C.2)}$$

In which:

p'' ----- The maximum allowable working pressure in test temperature, MPa;

p_b ------ The pressure of the burst test or the pressure of the test stopping point, MPa;

• -------- The coefficient of welded joint;

Rm ------ The lower limit of the standard tensile strength of the material;

R_{mave} -------- The average tensile strength of the test item in room temperature, MPa, determined by according to C.4.4.

R_{mh} ------- The upper limit of the standard tensile strength of the material, MPa;

b) After considering the corrosion allowance, the maximum allowable working pressure p' at test temperature should be determined by according to formula (C.3):

$$p' = p'' \frac{(t - c_2)^n}{t^n} \quad \text{.....(C.3)}$$

In which:

p' ------ After considering the corrosion allowance, the maximum allowable working pressure in test temperature, MPa;

t ------ The material thickness at the place where the strength is weakest, mm;

C_2 ---- The corrosion allowance, mm;

n ------The structure and shape factor. For cylinders, spherical-shells, and conicals with half vertex angle of • • 60° etc., as well as when the bending stress of pressure components not exceeding 2/3 of the total stress, n=1; for flat surface or semi-flat surface, such as flat cover plates, flanges or conicals with half vertex • > 60° etc, as well as when the bending stress of pressure components exceeds 2/3 of the total stress, n=2.

C.4.2 The maximum allowable working pressure at design temperature

The maximum allowable working pressure pmax at design temperature should be calculated using formula (C.4):

$$p_{max} = p' \frac{[\sigma]^t}{[\sigma]} \quad \text{.....(C.4)}$$

in which:

p_{max} ----- the maximum allowable working pressure at design temperature, MPa;

$[\bullet]^t$ -------- the allowable stress of the material at design temperature, MPa;

[•] --------- the allowable stress of the material at test temperature, MPa;

C.4.3 Use the maximum allowable working pressure calculated from C.4.1 and C.4.2 as the basis to determine the design pressure p of the pressure vessel.

C.4.4 Determination of the average tensile strength R_{mave} of the test sample

C.4.4.1 The test sample should be cut from material which is same as the material of the test vessel by mechanical methods.

C.4.4.2 Take the average value of tensile strength from three samples as the average tensile strength.

Appendix D

(Normative annex)

Comparative empirical design method

D.1 General provisions

D.1.1 This Appendix specifies the general requirements for using the comparative empirical design method.

D.1.2 This Appendix applies to the comparative empirical design of pressure vessels where the comparative empirical designed pressure vessels and the reference pressure vessel have the same or similar structures and design conditions.

D.1.3 Pressure vessels meet the following requirements can use the comparative empirical design method set in this Appendix:

a) Pressure vessels cannot be designed by according to GB 150.3;

b) The lower limit of the standard tensile strength of the materials is lower than 540MPa;

c) Pressure vessels contain medium with toxicity level as moderate hazard.

D.1.4 The design unit should obtain the user approved testimony documents and design documents about the safe use of the reference pressure vessel.

D.1.5 Designing by this method should follow Article 1.9 of the Technical Supervision Regulation for Safety of Stationary Pressure Vessels to pass the technology assessment.

D.2 Requirements on using experiences

D.2.1 The reference pressure vessel should be a vessel has been in actual operation, and its safe operation period must not be less than 5 years.

D.2.2 The actual operating conditions of the reference pressure vessel must not be less than 80% of its design conditions.

D.3 Design conditions

D.3.1 The same structure and same medium as the reference pressure vessel.

D.3.2 The design temperature must not be higher than the design temperature of the reference pressure vessel; for pressure vessels with design temperature is below $0^{o}C$, then the design

temperature of such pressure vessels shall not be lower than the design temperature of the reference pressure vessel.

D.3.3 The design pressure shall not exceed the design pressure of the reference pressure vessel.

D.4 Structures

D.4.1 Comparative empirical designed pressure vessels should have the same or similar structures as the reference pressure vessel, the structure similarity ratio of the main structure dimensions are within the range of 0.85 to 1.15.

D.4.2 Under the premise of ensuring the operating functions of the comparative empirical designed pressure vessel, should also considering structural optimisation, reducing the effect from the secondary stress and peak stress caused by the discontinuity of the overall structure and local structure.

D.5 Materials

D.5.1 The mechanical properties of the materials of the comparative empirical designed pressure vessel at the design temperature must not be less than the corresponding requirements for the materials of the reference pressure vessel.

D.5.2 The corrosion resistance of the materials of the comparative empirical designed pressure vessel shall not be lower than the corresponding requirements for the materials of the reference pressure vessel.

D.6 Design

D.6.1 The comparative empirical design of the pressure vessels should meet the above requirements, the structure size can be determined with structurally similar principles.

D.6.2 The design unit should provide the design specifications.

D.6.3 Pressure vessels which are subjected to fatigue analysis by according to section 3.10.2 and section 3.10.3 of JB 4732, when carry out the comparative empirical design of such vessels by according to the requirements of this Appendix, the contents of the fatigue analysis of such pressure vessels should be added into the design specifications.

Appendix E

(Normative annex)

Local structure stress analysis and evaluation

E.1 General provisions

E.1.1 This Appendix specifies the basic requirements for the local structure of pressure vessels using stress analysis (according to GB 150 to design the overall pressure vessel) as the design basis.

E.1.2 This Appendix applies only to the local structures of vessels where the design calculations are impossible to carry out by according to GB 150.3.

E.2 Design management

E.2.1 The design units and designers who carry out stress analysis to the local structures of pressure vessels by according to this Appendix are not required to hold analysis and design qualifications.

E.2.2 The design unit should be responsible for the accuracy of the local structure analysis, the analysis report should be used as the corresponding strength calculation note of the local structure.

E.3 Requirements for strength evaluation

E.3.1 The evaluation methods for stress classification and stress analysis results should be in line with the provisions in JB 4732.

E.3.2 The determination of the design stress intensity of materials should be in accordance with the allowable stress of the corresponding material in GB 150.2.

E.4 The requirements on fabrication, inspection and acceptance of the local structures should be in accordance with the corresponding provisions in JB 4732.

Appendix F

(Normative annex)

Risk Assessment Report

F.1 General provisions

F.1.1 This Appendix specifies the general requirements for the risk assessment report.

F.1.2 The vessel designers should be according to relevant laws and regulations or the requirements of the entrustor, to draw up a Risk Assessment Report for the expected service status of the vessels.

F.1.3 The designers should give full consideration to the possible failure modes under a variety of working conditions, put forward security measures on the issues such as material selection, structural design, manufacturing and inspection requirements and other aspects, to prevent any possible failure.

F.1.4 The designers should provide the vessel users with any required information to draw up emergency plans for vessel incidents.

F.2 Principles and procedures of report formulation

F.2.1 At the design stage, the risk assessment is mainly aimed at hazard identification and risk control.

F.2.2 At the design stage, the risk assessment shall be conducted according to the following procedures:

a) On the basis of the user design conditions and other design input information, to determine the various use conditions of the vessel.

b) On the basis of the medium, operating conditions and environmental factors in various use conditions to carry out hazard identification, to determine any possible hazards and consequences;

c) Contrary to all hazards and corresponding failure modes, to explain all security measures and evidences should be taken;

d) With regard to all possible failure modes, provide required information to draw up emergency plans.

e) Form a complete risk assessment report.

F.3 Contents of risk assessment report

A risk assessment report should at least include:

a) The basic design parameters of pressure vessel: pressure, temperature, materials, media properties and external loads, etc.;

b) Description of the operating conditions.

c) Possible hazards under all operating and the design conditions, such as: explosions, leakage, breakage, deformation, etc.;

d) For the failure modes have been specified in standards, illustrate the terms of that standard;

e) For the failure modes have not been specified in standards, illustrating the selection basis of the design loads, safety factors and the corresponding calculation methods;

f) Measures on how to deal with small amount leakages and large amount emissions of media and explosive situations;

g) According to possible injury situation of surrounding personnel, specifies appropriate personnel protective equipment and measures;

h) The risk assessment report should have consistent signatures as the design drawings.

Appendix G

(Informative annex)

Standard Proposal /Inquiries Total No. of

• Standard proposal	• Standard inquiries	Name of the Standard	
Unit		Name	
Contact address		Post code	
Phone No./Fax No.		Email	
Terms of the Standard			
Proposal/ inquiry contents (additional pages are permitted)			
Technical basis and relevant information (additional pages are permitted)			
Additional explanation			
Official unit stamp or proposal(inquiry) personnel signature:		Submission date: _____Year_____Month_____Date	

China Standardisation Committee on Boilers and Pressure Vessels (CSCBPV)

Address: D. 3rd Floor, Xiyuan Building No.2, Heping Jie, Chaoyang District, Beijing

Post code: 100013