KENYA STANDARD

KS 2409-6: 2018
ICS13.030.30; 13.340.30

Health care wastes management commodities

Part 6:

Filtering face masks to protect against particles — Specification

First Edition 2018

PUBLIC REVIEW DRAFT

NATIONAL WORKSHOP REPRESENTATION

The following organizations were represented on the National Workshop Agreement Meeting.

City Council of Nairobi
Coast Provincial General Hospital
Nursing Council of Kenya
Kenya Medical Supplies Agency
Kenyatta National Hospital
Ministry of Medical Services
Kenya Expanded Progrmme of Immunization
Reprentative, Rural Health Facilities
Ministry of Public Health and Sanitation
Government Chemist's Department
Moi Teaching and Referral Hospital
Path-Kenya
Christian Health Association of Kenya
Ministry of Public Health and Sanitation — Office of the Chief Public Health Officer
Ministry of Medical Services — Office of the Chief Nursing Officer
Ministry of Medical Services — Office of the Director of Medical Services
Kenya Medical Scientific Technical Officers Association
Kenya Medical Research Institute
Kenya Bureau of Standards — Secretariat

REVISION OF KENYA STANDARDS

In order to keep abreast of progress in industry, Kenya Standards shall be regularly reviewed. Suggestions for improvements to published standards, addressed to the Managing Director, Kenya Bureau of Standards, are welcome.

ICS 13.030.30; 13.340.30

Health care wastes management commodities

Part 6:

Filtering face masks to protect against particles — Specification

KENYA BUREAU OF STANDARDS (KEBS)

Head Office: P.O. Box 54974, Nairobi-00200, Tel.: (+254 020) 605490, 602350, Fax: (+254 020) 604031
E-Mail: info@kebs.org, Web:http://www.kebs.org

Coast Region
P.O. Box 99376, Mombasa-80100
Tel.: (+254 041) 229563, 230939/40
Fax: (+254 041) 229448

Lake Region
P.O. Box 2949, Kisumu-40100
Tel.: (+254 057) 23549, 22396
Fax: (+254 057) 21814

Rift Valley Region
P.O. Box 2138, Nakuru-20100
Tel.: (+254 051) 210553, 210555

Foreword

Foreword

Kenya Bureau of Standards is a national standards body (NSB). The work of preparing Kenya Standards is normally carried out through national technical committees. Each member body interested in a subject for which a technical committee has been established has the right to be represented on that committee. National organizations, governmental and non-governmental, in liaison with KEBS, also take part in the work.

Kenya Standards are drafted in accordance with the rules given in the KS ISO/IEC Directives, Part 2.

The main task of technical committees is to prepare National Standards. Draft Kenya Standards adopted by the technical committees are circulated to the technical committee members for balloting. Publication as a Kenya Standard requires approval by at least 2/3 of the members casting a vote.

Attention is drawn to the possibility that some of the elements of this document may be the subject of patent rights. KEBS shall not be held responsible for identifying any or all such patent rights.

This Kenya Standard was prepared by Technical Committee KEBS/TC 164, *Furniture*.

During the development of this National Workshop Agreement, reference was made to the following standards.

BS EN 149: 2001: Respiratory protective devices – Filtering half masks to protect against particles – Requirements, testing, marking.

This assistance is hereby acknowledged.

ICS 13.030.30; 13.340.30

Introduction

Protective masks are pieces of kit or equipment worn on the head and face to afford protection to the wearer, and today usually have these functions:

a) Providing a supply of air or filtering the outside air.

b) Protecting the face against flying objects or dangerous environments, while allowing vision.

In Roman gladiatorial tournaments masks were sometimes used. From archaeological evidence it is clear that these were not only protective but also helped make the wearer appear more intimidating. In medieval Europe and in Japan soldiers and samurai wore similarly ferocious-looking protective armour, extending to face-masks.

In sport the protective mask will often have a secondary function to make the wearer appear more impressive as a competitor.

Before strong transparent materials such as polycarbonate were invented, visors to protect the face had to be opaque with small eyeslits, and were a sort of mask, as often in mediaeval suits of armour, and (for example) Old Norse *grímr* meant "mask or visor".

Also known as respirators they are devices designed to protect the wearer from inhaling harmful dusts, fumes, vapors, or gases. Respirators come in a wide range of types and sizes used by the military, private industry, and the public. Respirators range from cheaper, single-use, disposable masks to reusable models with replaceable cartridges.

There are two main categories: the *air-purifying respirator*, which forces contaminated air through a filtering element, and the *air-supplied respirator*, in which an alternate supply of fresh air is delivered. Within each category, different techniques are employed to reduce or eliminate noxious airborne contents.

Health care wastes management commodities

Part 6:

Filtering face masks to pprotect against particles — Specification

1 Scope

This Part 6 of this Kenya National Workshop Agreement specifies the requirements for filtering half masks as respiratory protective devices to protect against particlles except for escape purposes.

2 Definitions

For the purposes of this Workshop Agreement, the following definition shall apply:

2.1
face masks
are filtering devices covering the nose and mouth and the chin and may have inhalation and/or exhalation valve(s). It consists entierly or substantially of filter material or comprises a facepiece in which the main filter(s) form an insepaarable part of the device.

3 Description

Filtering face masks are intended to provide adequate sealing on the face of the wearer against the ambient atmosphere, when the skin is dry or moist and when the head is moved.

Air enters the particle filtering half mask and passes directly to the nose and mouth area of the facepiece or, via an inhalation valve(s) if fitted. The exhalation air flows through the filter material and/or an exhalation valve (if fitted) directly to the ambient atmosphere.

These devices are designed to protect against both solid and liquid aerosols.

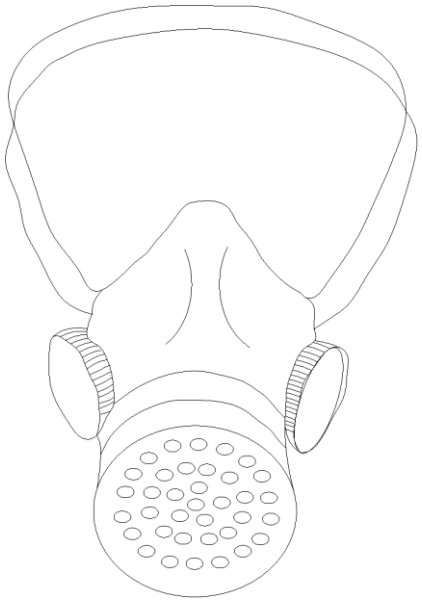

Figure 1 — Typical half filtering face mask

4 Classification

Particle filtering half masks are classified according to their filtering efficiency and their maximum total inward leakage. There are three classes of devices;

FFP1, FFP2 and FFP3.

The protection provided by an FFP1, or FFP3 – devices includes that provided by the device of lower class or classes.

5 Designation

Particle filtering half masks meeting the reqirements of this National Workshop Agreement shall be designated in the following manner:

Particle filtering half mask NWA XX, year of publication, class

where,

XX is the number of this NWA.

6 Requirements

6.1 General

In all tests, all test samples shall meet the requirements.

6.2 Nominal values and tolerances

Unless otherwise specified, the values stated in this National Workshop agreement are expressed as nominal values. Except for temperature limits, values which are not stated as maxima or minima shall be

subject to a tolerance of ± 5 %. Unless otherwise specified, the ambient temperature for testing shall be room temperature with the temperature limits being subject to an accuracy of ± 1 °C.

6.3 Visual inspection

The visual inspection shall also include the marking and the information supplied by the manufacturer.

6.4 Material

Face masks shall be made of materials that are suitable to withstand handling and wear over the period for which the particle filtering half mask is designed to used. They shall shall not suffer mechanical failiure of the facepiece or straps or even particle filtering collapse on undergoing conditioning described in Annex A.

6.5 Cleaning and disinfecting

If the particle filtering half mask is designed for more than a single shift (i.e. not designed for single use only), the materials used shall withstand the cleaning and disinfecting agents recommended by the manufacturer when tested in accordance with the method decsribed in Annex B.

6.6 Leakage

6.6.1 Total inward leakage

For particle filtering half masks fitted in accordance with the manufacturer's information, at least 46 out of the 50 individuaal exercise results (i.e. 10 subjects X 5 exercises) for total inward leakage shall be not greater than

25 % for FFP1

11 % for FFP2

2 % for FFP3

when tested in accorance to Annex C.

6.6.2 Penetration of filter material

The penetration of the filter of the particle filtering half mask shall meet the requirements in Table 1 when tested in accordance with the method described in Annex D.

Table 1 — Penetration of filter material

Classification	Maximum initial penetration of test aerosols	
	Sodium chloride test 95 l/min. % max.	Paraffin oil test 95 l/min. % max.
FFP1	20	20
FFP2	6	6
FFP3	1	1

6.6.3 Flammability

When tested in accordance with the method described in Annex E, the particle filtering half mask shall not burn for more than 5 s after removal from the flame.

6.6.4 Breathing resistance

When tested in accordance to the method described in Annex F, the valved and valveless particle filtering half masks shall meet the requirements of Table 2.

Table 2 — Breathing resisstance

Classification	Maximum permitted resistance (mbar)		
	Inhalation		Exhalation
	30 l/min.	95 l/min.	160 l/min.
FFP1	0.6	2.1	3.0
FFP2	0.7	2.4	3.0
FFP3	1.0	3.0	3.0

6.6.5 Clogging

6.6.5.1 General

For single-use devices only, the clogging test shall be optional.

Devices designed to be resistant to clogging, shown by a slow increase of breathing resistance when loaded with dust, shall be subjected to the treatment described in Annex G.

6.6.5.2 Breathing resistance for the valved particle filtering half masks

After clogging the inhalation resistances shall not exceed

a) FFP1: 4 mbar

b) FFP2: 5 mbar

c) FFP3: 7 mbar at 95 l/min continuous flow

The exhalation resistance shall not exceed 3 mbar at 160 l/min continuous flow.

6.6.5.3 Breathing resistance for valveless fitering half masks

After clogging the inhalation and exhahaltion resistance shall not exceed

a) FFP1: 3 mbar

b) FFP2: 4 mbar

c) FFP3: 5 mbar at 95 l/min continuous flow

7 Marking and packaging

7.1 Marking

The following information shall be indelibly and legibly marked on the package of each mask in English.

a) The name, registered trademark and/or other means of identification of the manufacturer or supplier.

b) Classification: FFP1, FFP2, FFP3.

c) Year of the end of shelf-life.

d) The sentence “see information supplied by the manufacturer”, at least in the original language(s) of the country of destination, or by using the pictogram as shown in Figure 12.

e) The manufacturer’s recommended conditions of storage (at least the temperature and humidity) or equivalent pictogram, as shown in Figure 12.

f) The packaging of the particlle filtering half masks passing the dolomite clogging test shall additionally be marked with the letter “D”.

7.1.2 Particle filtering half mask

Particle filtering half masks complying with this standard shall be indelibly and legibly marked with the following information:

a) the name and registered trade mark of the manufacturer or supplier.

b) the number and year of publication of this NWA.

c) the symbols FFP1, FFP2 or FFP3 according to class.

d) if appropriate the letter “D” in accordance with the performance.

7.1.3 Information to be supplied by the manufacturer

7.1.3.1 Information supplied by the manufacturer shall accompany every smallest available package.

7.1.3.2 The information suplied by the manufacturer shall be at least in English.

7.1.3.3 The information supplied by the manufacturer shall contain all information necessary for trained and qualified persons on:

a) applicaction/limitation;

b) the meaning of any colour coding checks prior to use;

d) donning, fitting;

e) use;

f) maintenance (e.g. cleaning, disinfecting), if applicable;

g) storage;

h) the meaning of any symbols/pictograms used of the equipment;

i) Warning of any problems likely to be encountered e.g. fit of particle filtering half masks (check prior to use), it is unlikely that the requirements for leakage will be achieved if facial hair passes under the face seal, etc.

7.2 Packaging

Face masks shall be packed in polythene packs individually or in any suitable way that they are protected against mechanical damage and contamination.

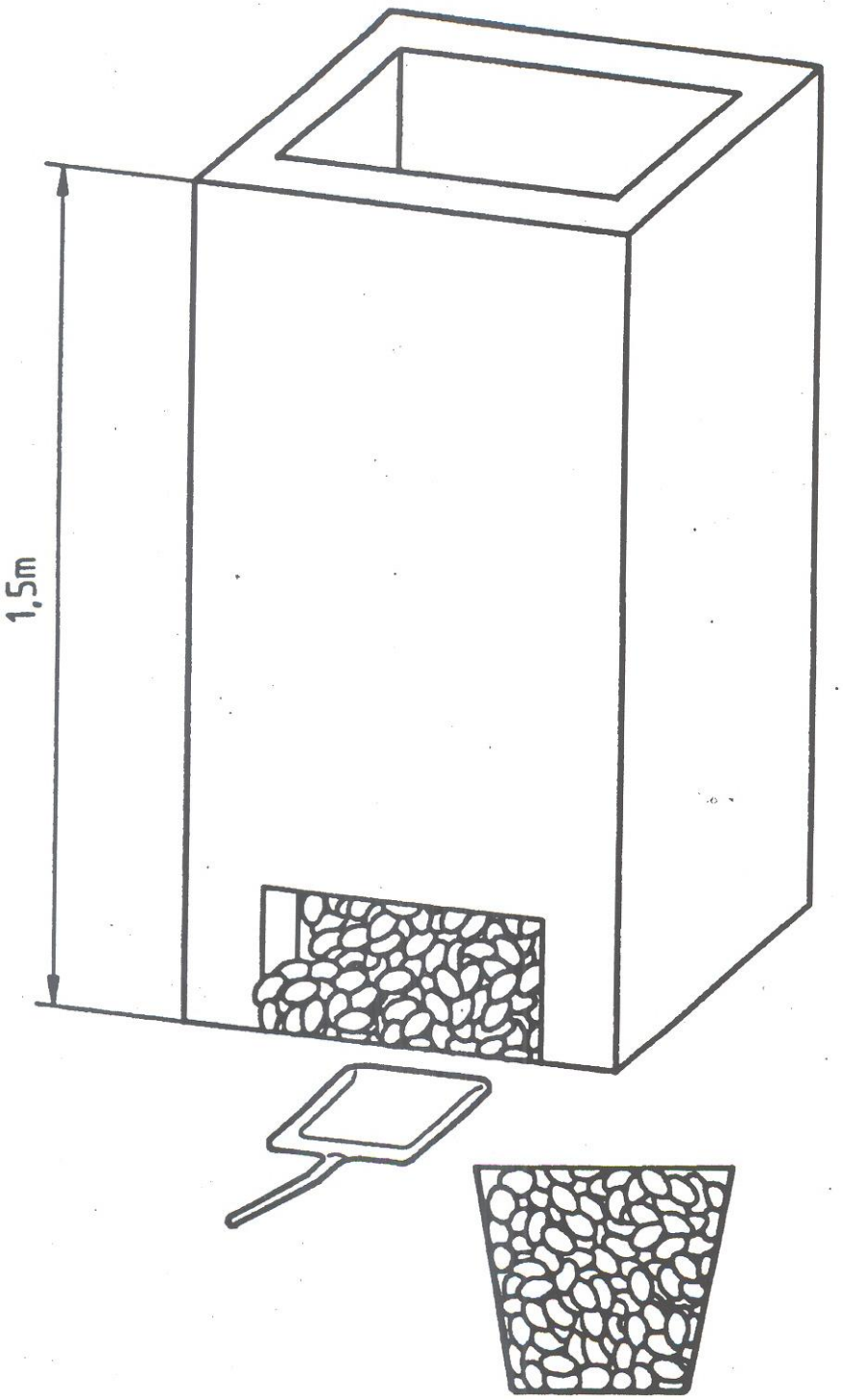

Figure 1 — Basket and hopper, chippings

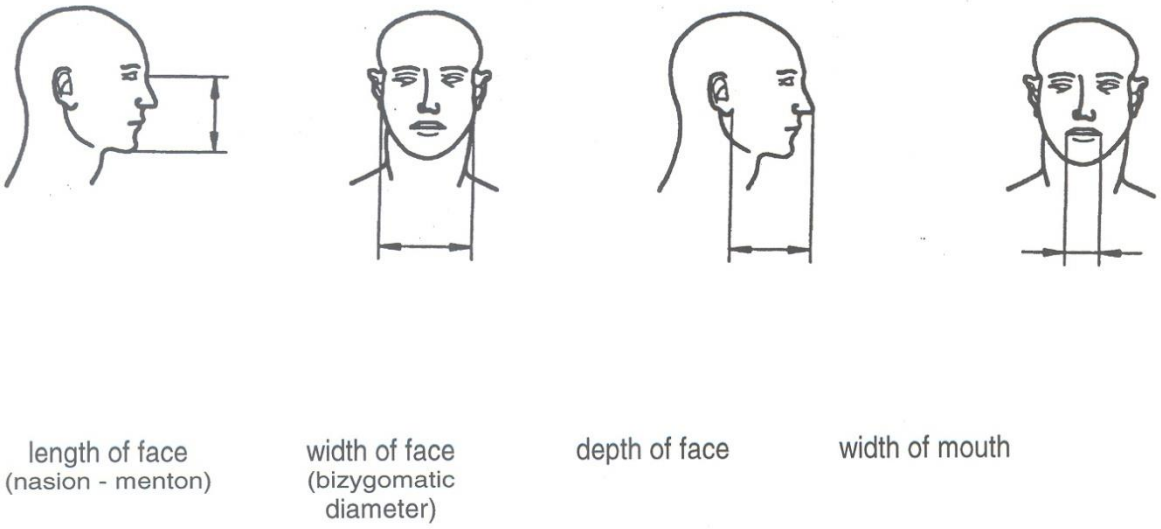

Figure 2 — Facial dimensions

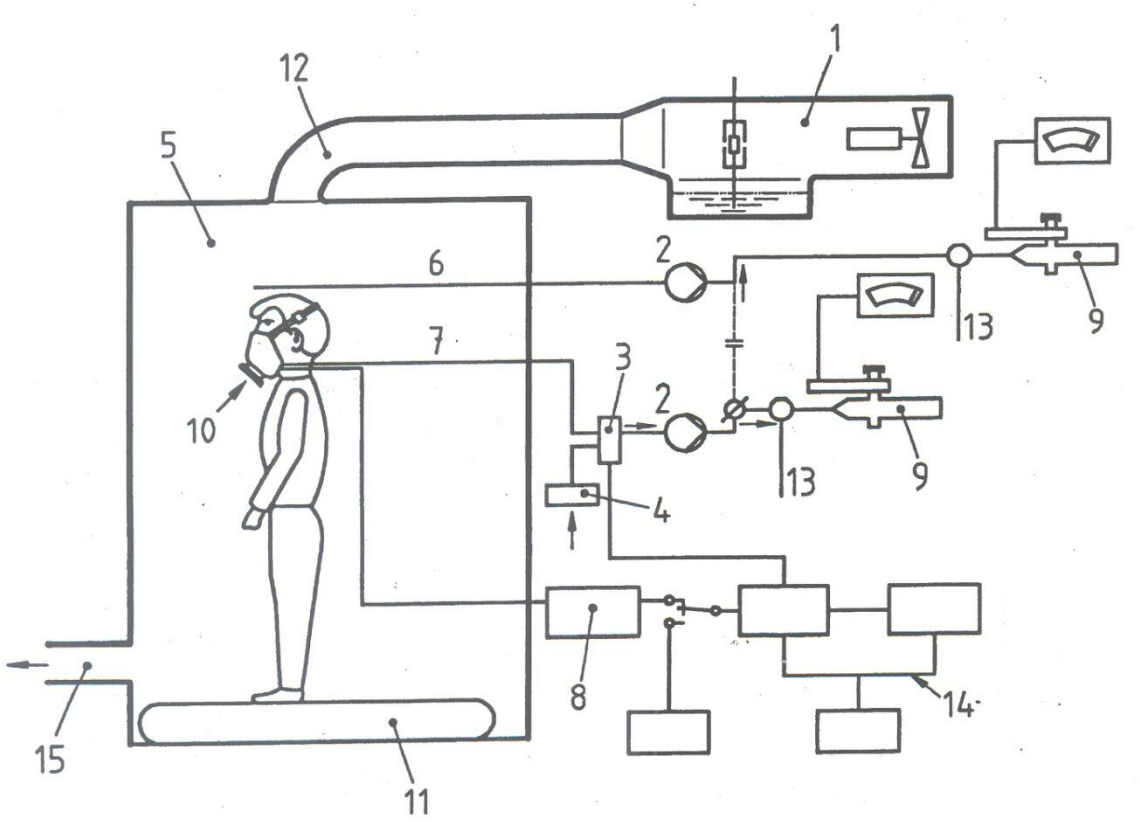

Key

1 Atomizer
2 Pump
3 Change-over valve
4 Filter
5 Enclosure
6 Enclosure sample
7 Mask sample
8 Manometer
9 Photometer
10 Particle filtering half mask
11 Treadmill
12 Ducting and baffle
13 Additional air
14 Pulsed sampling interface
15 Exhaust

Figure 3 — Typical apparatus used in the determination of inward leakage using sodium chloride

Dimensions in millimetres

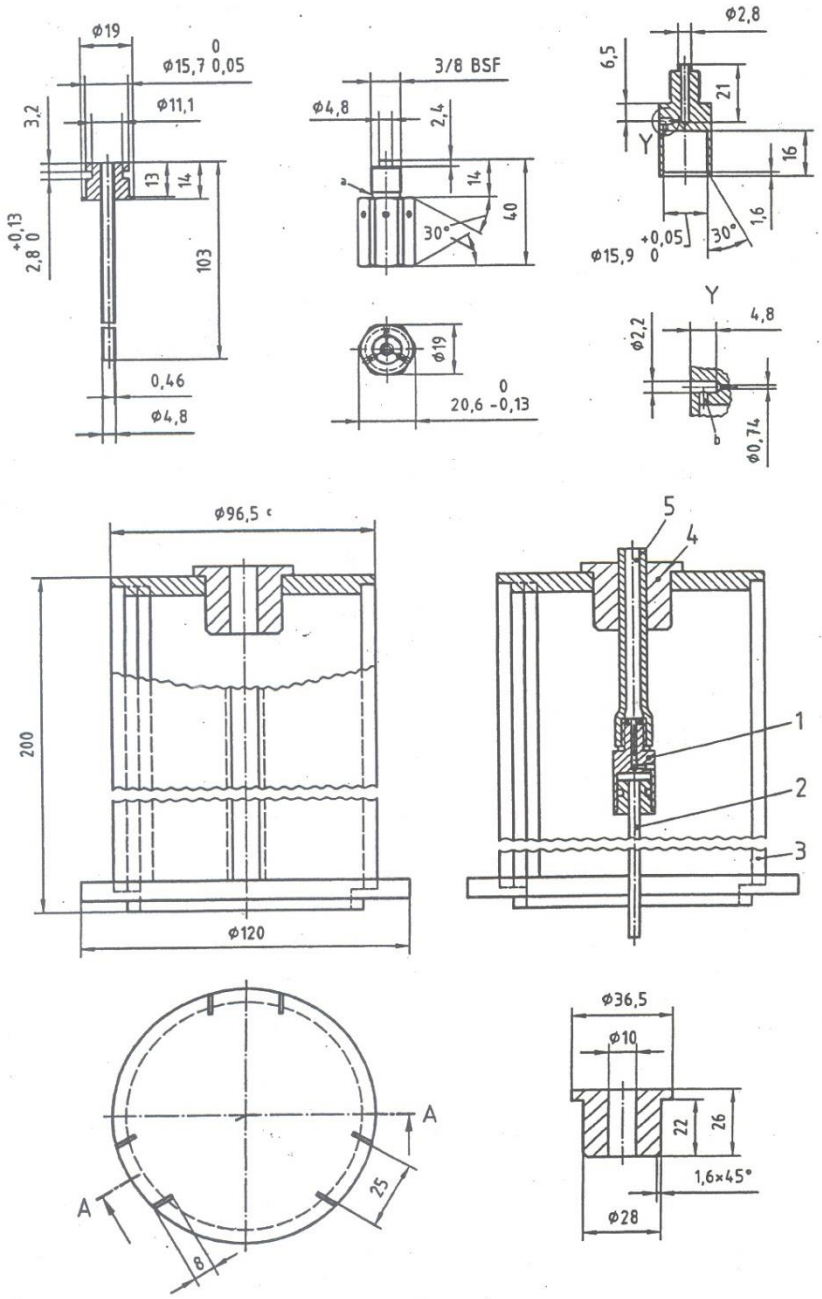

Key

1 Nozzle
2 Feed tube (salt solution)
3 Sleeve
4 Bush
5 Air tube (10,0 Outer Diameter)

Figure 4 — Typical assembly of atomizer

Dimensions in millimetres

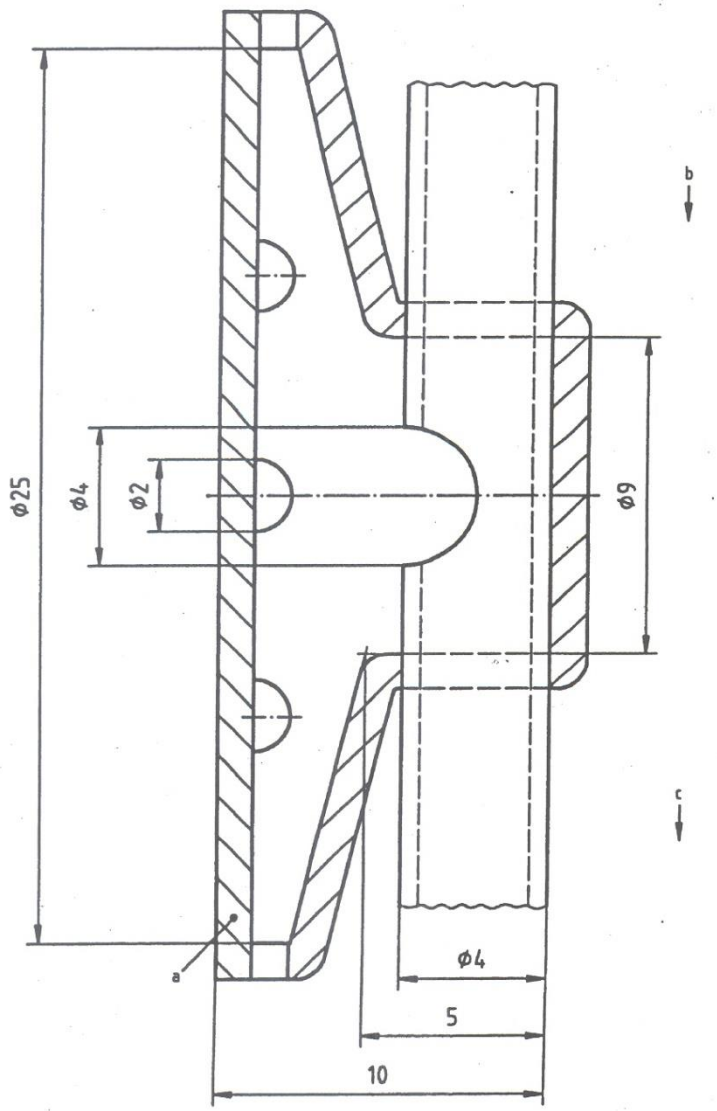

Key

a) Clear material
b) Drying air
c) Drying air plus sample

Figure 5 — Typical Sample probe

Dimensions in millimetres

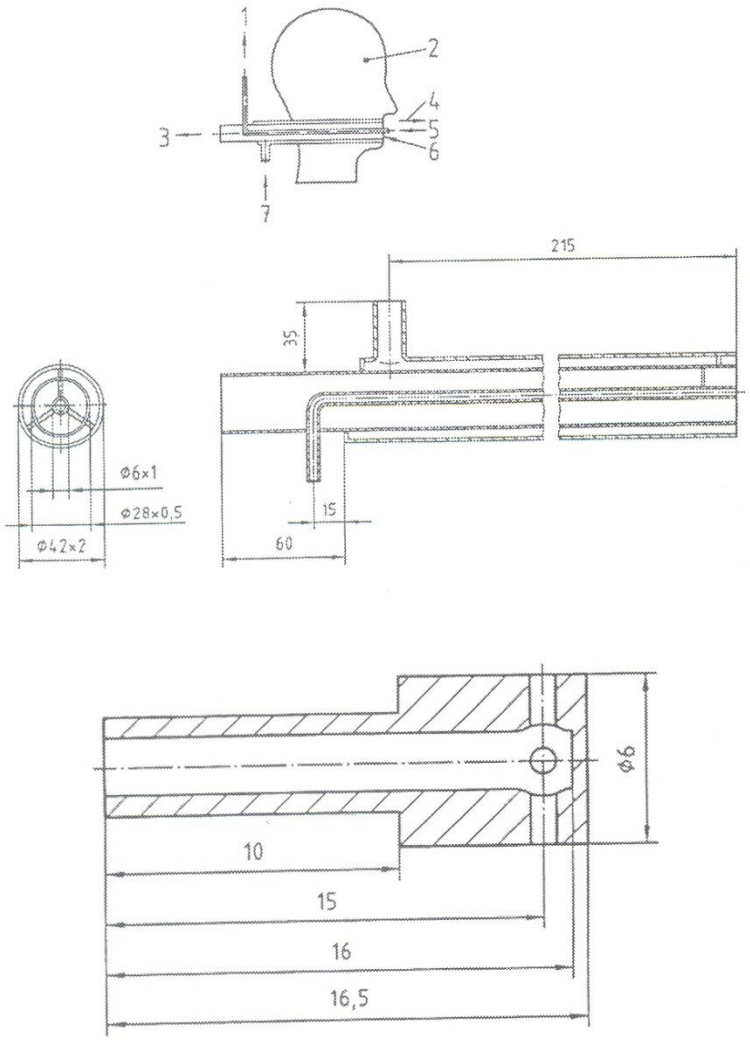

Key

1 to manometer
2 dummy head
3 to breathing machine, inhalation
4 exhaled air
5 pressure port
6 inhaled air
7 from breathing machine, exhalation

Figure 6 — Dummy head (Sheffield head) for carbon dioxide content test of the inhalation air (dead space) for a particle filtering half mask and insert for measuring the breathing resistance

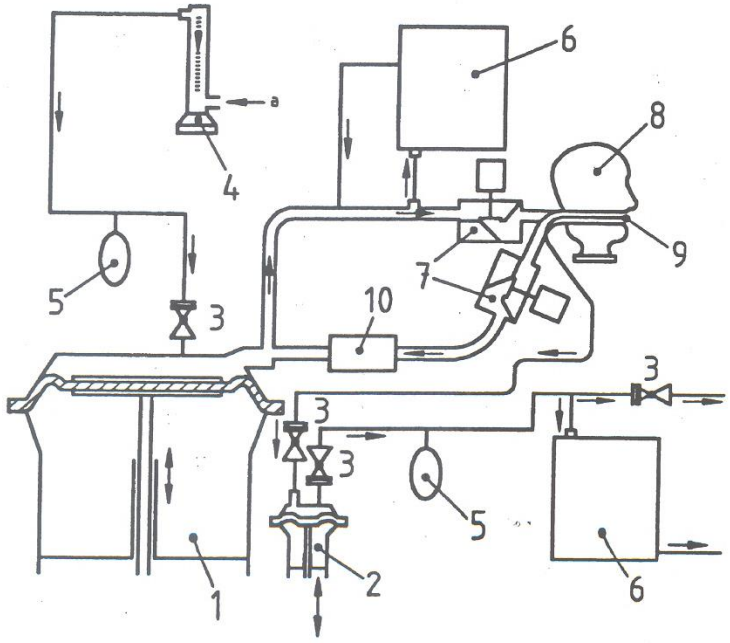

Key
a) CO_2

1 Breathing machine
2 Auxiliary lung
3 Non-return valve
4 Flowmeter
5 Compensator
6 Carbon dioxide analyser
7 Solenoid valve
8 Dummy head
9 Sampling tube for inhalation air (see Figure 6); tubing of the dummy head shall end flush with the opening of the mouth
10 Carbon dioxide absorber

Figure 7 — Scheme of typical test rig for carbon dioxide content of inhalation air

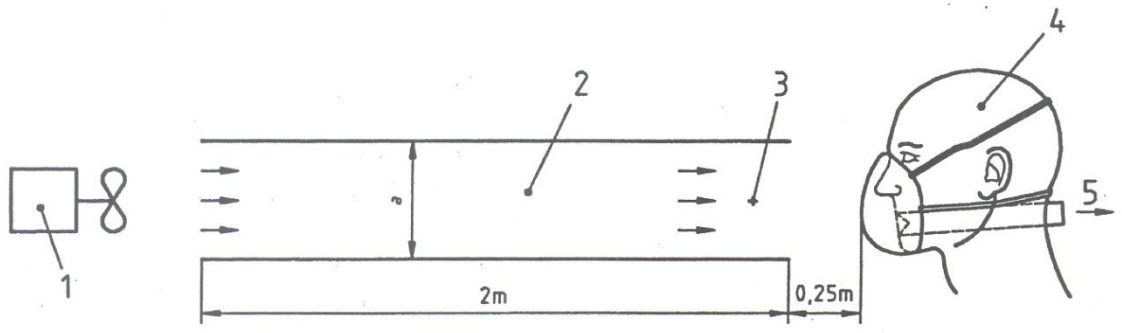

Key
1 Blower
2 Duct
3 Sensor for air flow
4 Dummy head
5 Towards the breathing machine
Dimension "a": (0,3 to 0,5) m

Figure 8 — Scheme of test arrangement and air flow for carbon dioxide content test

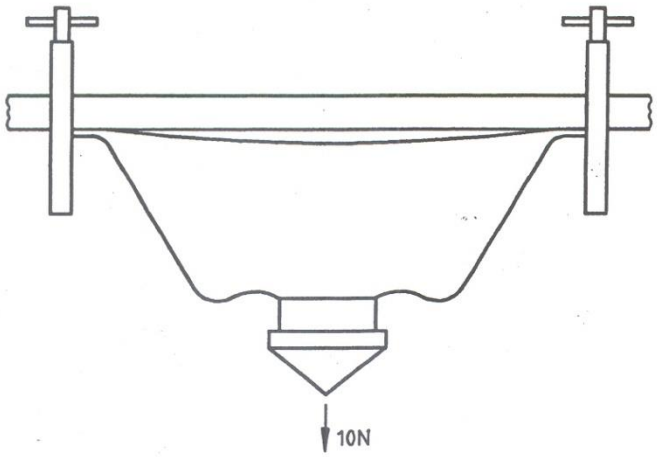

Figure 9 — Typical arrangement of axial tensile force test on exhalation valve housing

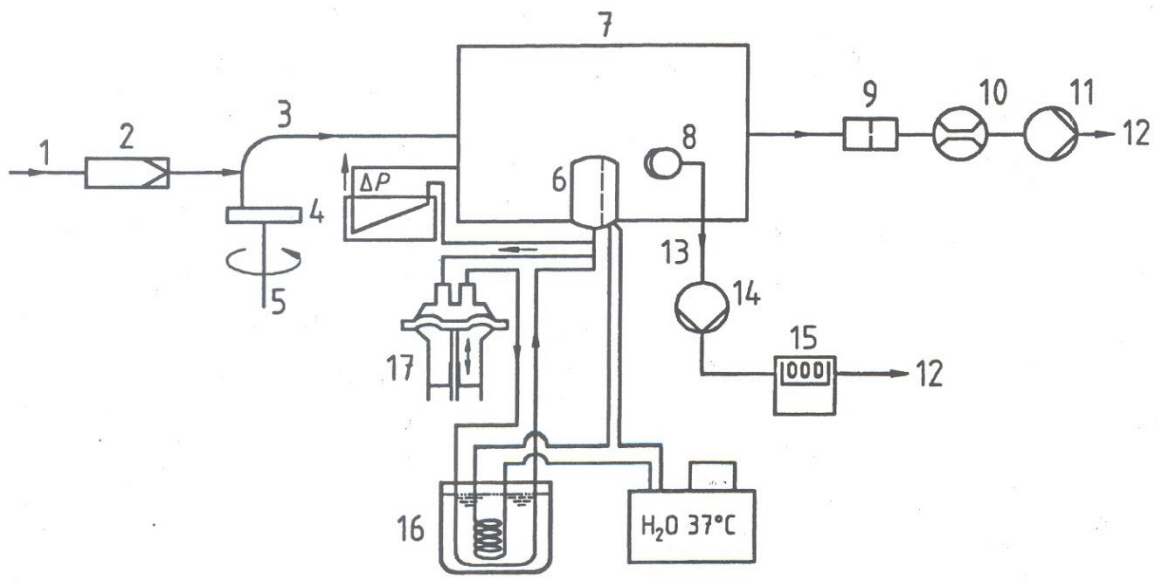

Key

1 Compressed air
2 Air filter
3 Injector
4 Dust
5 Dust distributor
6 Specimen
7 Dust test chamber
8 Probe
9 Filter
10 Flowmeter
11 Pump
12 Exhaust
13 Probe line
14 Pump
15 Counter
16 Humidity
17 Breathing machine

Figure 10 — Details of typical dolomite clogging test apparatus

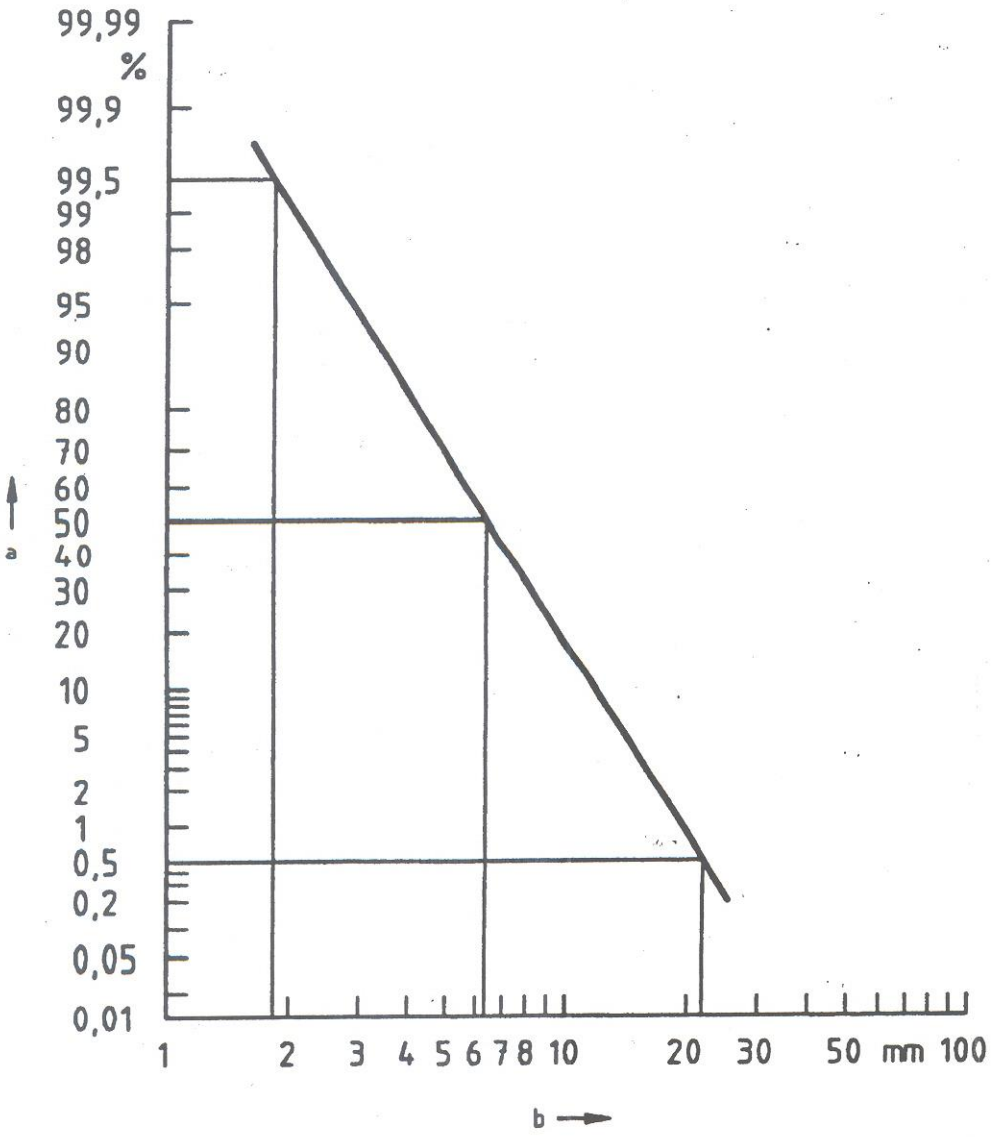

Size distribution (mass) dolomite DRB 4/15 test aerosol

a) Percentage above stated size

b) Particle diameter, mass basis (mm)

Figure 11 — Particle distribution of dolomite dust in the test chamber

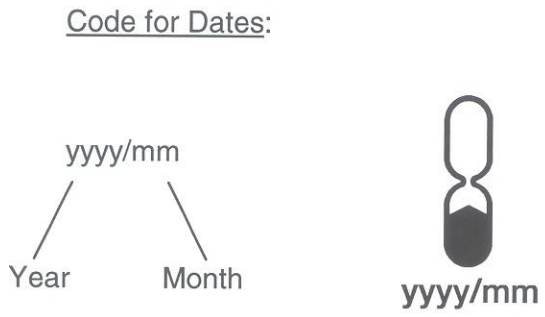

Figure 12a — End of shelf life

Figure 12b — See information supplied by the manufacturer

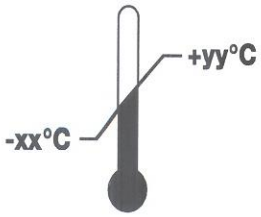

Figure 12c — Temperature range of storage conditions

Figure 12d — Maximum relative humidity of storage conditions

Figure 12 — Pictograms

Annex A
(normative)

Materials used for construction

A.1 Visual inspection

The visual inspection is carried out where appropriate by the test house prior to laboratory or practical performance tests.

A.2 Conditioning

A.2.1 Simulated wearing treatment

Conditioning by simulated wearing treatment shall be carried out by the following process.

A breathing machine is adjusted to 25 cycles/min and 2.0 L/stroke. The particle filtering half mask is mounted on a Sheffield dummy head. For testing, a saturator is incorporated in the exhalation line between the breathing machine and the dummy head, the saturator being set at a temperature in excess of 37 °C to allow for the cooling of the air before it reaches the mouth of the dummy head. The air shall be saturated at (37 ± 2) °C at the mouth of the dummy head. In order to prevent excess water spilling out of the dummy's mouth and contaminating the particle filtering half mask the head shall be inclined so that the water runs away from the mouth and is collected in a trap.

The breathing machine is brought into operation, the saturator switched on and the apparatus allowed to stabilize. The particle filtering half mask under test shall then be mounted on the dummy head. During the test time at approximately 20 min intervals the particle filtering half mask shall be completely removed from the dummy head and refitted such that during the test period it is fitted ten times to the dummy head.

A.2.2 Temperature conditioning

Expose the particle filtering half masks to the following thermal cycle:

a) for 24 h to a dry atmosphere of 70 °C; ± 3 °C;

b) for 24 h to a temperature of -30 °C;± 3 °C; and allow to return to room temperature for at least 4 h between exposures and prior to subsequent testing.

The conditioning shall be carried out in a manner which ensures that no thermal shock occurs.

Annex B
(normative)

Cleaning and disinfecting

B.1 General

A total of 2 particle filtering half masks shall be tested: both as received.

All tests shall be carried out by two test subjects at ambient temperature and humidity shall be recorded.

Prior to the test there shall be an examination to assure that the particle filtering half mask is in good working condition and that it can be used without hazard.

Examination shall be done in accordance with Clause A.1.

For the test, persons shall be selected who are familiar with using such or similar equipment.

During the tests, the particle filtering half mask shall be subjectively assessed by the wearer and after the test, comments on the following shall be recorded:

a) head harness comfort

b) security of fastenings

c) field vision

d) any other comments reported by the wearer on request.

Annex C
(normative)

Leakage

C.1 Leakage

C.1.1 General test procedure

C.1.1.1 Total inward leakage

A total of 10 test specimens shall be tested: 5 as received and 5 after temperature conditioning in accordance with A.2.2.

The total inward leakage shall be tested using sodium chloride aerosol.
Prior to the test there shall be an examination to ensure that the particles filtering half mask is in good working condition and that it can be used without hazard.
Examination shall be done in accordance with Clause A.1.

For the test, persons shall be selected who are familiar with using such or similar equipment.
A panel of ten clean-shaven persons (without beards or sideburns) shall be selected covering the spectrum of facial characteristics of typical users (excluding significant abnormalities). It is to be expected that exceptionally some persons cannot be satisfactorily fitted with a particle filtering half mask. Such exceptional subjects shall not be used for testing particles filtering half masks.

In the test report the faces of the ten test subjects shall be described (for information only) by the four facial dimensions (in mm) illustrated in Figure 2.

C.1.1.2 Test equipment

The test atmosphere shall preferably enter the top of the enclosure through a flow distributor, and be directed downwards over the head of the test subject at a minimum flow rate of 0,12 m/s. The concentration of the test agent inside the effective working volume shall be checked to be homogeneous. The flow rate should be measured close to the subject's head.

A level treadmill is required capable of working at 6 km/h.

C.1.1.3 Test procedure

Ask the test subjects to read the manufacture's fitting information and if more than one size or particle filtering half mask is manufactured, ask the test subject to select the size deemed by him to be the most appropriate, if necessary the test supervisor shall show the test subjects how to fit the particle filtering half mask correctly in accordance with the fitting information.

Inform the test subjects that if they wish to adjust the particle filtering half mask during the test they may do so. However if this is done, repeat the relevant section of the test, having allowed the system to resettle.
The test subjects shall have no indication of the results as the test proceeds.

After fitting the particle filtering half mask, ask each test subject 'Does the mask fit? If the answer is 'Yes', continue the test. If the answer is 'No', take the test subject off the panel, report the fact and replace with another test subject.

The test sequences shall be as follows:

a) Ensure the test atmosphere is OFF.

b) Place the test subject in the enclosure. Connect up the facepiece sampling probe. Have the test subject walk at 6 km/h for 2 min. Measure the test agent concentration inside the particle filtering half mask to establish the background level.

c) Obtain a stable reading.

d) Turn the test atmosphere ON.

e) The subject shall continue to walk for a further 2 min or until the test atmosphere has stabilized.

f) Whilst still walking, the subject shall perform the following exercises:

1) walking for 2 min without head movement or talking.

2) turning head from side to side (appx. 15 times), as if inspecting the walls of tunnel for 2 min.

3) moving the head up and down (approx. 15 times), as if inspecting the roof and floor for 2 min.

4) reciting the alphabet or an agreed text out loud as if communicating with a colleague for 2 min.

5) walking for 2 min without head movement.

g) Record

1) enclosure concentration;

2) the leakage over each exercise period.

h) Turn off the test atmosphere and when the test agent has cleared from the enclosure remove the subject.

After each test, replace the particle filtering half mask by a new sample.

C.2 Method

C.2.1 Principle

The subject wearing the particle filtering half mask under test walks on a treadmill over which is an enclosure.

Through this enclosure flows a constant concentration of NaCl aerosol. The air inside the particle filtering half mask is sampled and analysed during the inhalation phase of the respiratory cycle to determine the NaCl content. The sample is extracted by punching a hole in the particle filtering half mask and inserting a probe through which the sample is drawn. The pressure variation inside the particle filtering half mask is used to actuate a change-over valve so that inhaled air only is sampled. A second probe is inserted for this purpose.

C.2.2 Test equipment (see Figure 3)

C.2.2.1 Aerosol generator

The NaCl aerosol shall be generated from a 2 % solution of reagent grade NaCl in distilled water. An atomizer equivalent to the type described should be used (see Figure 4). This requires an air flow rate of 100 l/min at a pressure of 7 bar. The atomizer and its housing shall be fitted into a duct through which a constant flow of air is maintained. It may be necessary to heat or dehumidify the air in order to obtain complete drying of the aerosol particles.

C.2.2.2 Test agent

The mean NaCl concentration within the enclosure shall be 8 mg/m^3 ± 4 mg/m^3 and the variation throughout the effective working volume shall be not more than 10 %. The particle size distribution shall be 0.02 µm to 2 µm equivalent aerodynamic diameter with a mass median diameter of 0.6 µm.

C.2.2.3 Flame photometer

A flame photometer shall be used to measure the concentration of NaCl inside the particle filtering half mask. Essential performance characteristics for a suitable instrument are:

a) It should be a flame photometer specifically designed for the direct analysis of NaCl aerosol;

b) It should be capable of measuring concentrations of NaCl aerosol between 15 mg/m^3 and 5 ng/m^3;

c) The total aerosol sample required by the photometer should not be greater than 15 1/min.

d) The response time of the photometer, excluding the sampling system, should not be greater than 500 ms;

e) It is necessary to reduce the response to other elements, particularly carbon, the concentration of which will vary during the breathing cycle. This will be achieved by ensuring that the band pass width of the interference filter is no greater than 3 nm and that all necessary side-band filters are included.

C.2.2.4 Sample selector

A system is required which will switch the sample to the photometer only during the inhalation phase of the respiratory cycle. During the exhalation phase, clean air shall be fed to the photometer. The essential elements of such a system are:

a) An electrically operated valve with a response time of the order of 100 ms. The valve should have the minimum possible dead space compatible with straight-through, unrestricted flow when open;

b) A pressure sensor which is capable of detecting a minimum pressure change of approx 0.05 mbar and which can be connected to a probe inserted in the cavity of the particle filtering half mask. The sensor shall have an adjustable threshold and be capable of differential signaling when the threshold is crossed in either direction. The sensor shall work reliably when subjected to the acceleration produced by the head movements of the subject.

c) An interfacing system to actuate the valve in response to a signal from the pressure sensor;

d) Timing device to record the proportion of the total respiratory cycle during which sampling took place.

C.2.2.5 Sampling pump

The probe shall be fitted securely in an airtight manner to the particle filtering half mask as near as possible to the centre line of the particle filtering half mask. A multiple hole sampling probe is strongly recommended.

Measure shall be taken to prevent the influence of condensation in the sampling probe on the measurement (by supplying dry air). Figure 5 shows a design that has been found suitable. The probe is adjusted so that it just touches the wearer's lips.

Care shall be taken to ensure that the probe does not disturb the normal fit or shape of the mask.

C.2.2.6 Sample pump

If no pump is incorporated into the photometer, an adjustable flow pump is used to withdraw an air sample from the particle filtering half mask under test. This pump is so adjusted as to withdraw a constant flow of 1 l/min from the sample probe. Dependent on the type of photometer it may be necessary to dilute the sample with clean air.

C.2.2.7 Sampling of enclosure concentration

The enclosure aerosol concentration is monitored during the tests using a separate sampling system, to avoid contamination of the particle filtering half mask sampling line. It is preferable to use a separate flame photometer for this purpose.

If a second photometer is not available, sampling of the enclosure concentration using a separate sampling system and the same photometer may be made. However, time will then be required to allow the photometer to return to a clean background.

C.2.2.8 Pressure detection probe

A second probe is fitted near to the sample probe and is connected to the pressure sensor.

C.2.3 Expression of results

The leakage P shall be calculated from measurements made over the last 100 s of each of the exercise periods to avoid carry over of results from one exercise to the other.

$$P(\%) = \frac{C_2}{C_1} \times \left(\frac{t_{IN} + t_{EX}}{t_{IN}}\right) \times 100$$

where,

C_1 is the challenge concentration;

C_2 is the measurement mean concentration in the breathing zone of the test subject;

C_3 is the total duration of inhalation;

t_{EX} is the total duration of exhalation.

Annex D
(normative)

Penetration of filtering material

The device shall be mounted in a leaktight manner on a suitable former and subjected to the filter penetration test, ensuring that components of the device that could affect filter penetration values such as valves and harness attachment points are exposed to the challenge aerosol.

The testing shall be in accordance to KS XX[1].

[1] KS XX under development.

Annex E
(normative)

Flammability test

E.1 A total of four particle filtering half masks shall be tested: two in the state as received and two after temperature conditioning in accordance with Annex A.

E.2 Procedure

The face piece is put on a metallic dummy head which is motorized such that it describes a horizontal circle with a linear speed, measured at the tip of the nose, of 60 mm/s ± 5 mm/s.

The head is arranged to pass over a propane burner the position of which can be adjusted. By means of a suitable guage, the distance between the top of the burner, and the lowest part of the face piece (when positioned directly over the burner) shall be set to20 mm ± 2 mm.

With the head away from the area adjacent to the burner, the propane gas is turned on, the pressure adjusted to between 0.2 bar and 0.3 bar and ignited. By means of a needle valve and fine adjustments to the supply pressure, the flame height shall be set to 40 mm ± 4 mm. This is measured with a suitable gauge. The temperature of the flame measured at a height of 20 mm ± 2 mm above the burner tip by means of a 1.5 mm diameter mineral insulated thermocouple probe, shall be 800 °C ± 50 °C.

Annex F
(normative)

Breathing resistance

F.1 Test samples and fixture

A total of 9 valveless filtering half masks shall be tested: three as received, three temperature conditioned, three after the test for simulated wearing.

The particle filtering masks shall be fitted securely in a leak-tight manner but without deformation on the Sheffield dummy head.

The flow rate at which the resistance is measured shall be corrected at 23 °C and 1 bar absolute.

F.2 Exhalation resistance

Seal the particle filtering half mask on the Sheffield dummy head. Measure the exhalation resistance at the opening for the mouth of the dummy head using adapter shown in figure 6 and a breathing machine adjusted to 25 cycles/min and 2.0 L/stroke or a continuous flow 160 L/min. Use a suitable pressure transducer.

Measure the exhalation resistance with the dummy head successively place in 5 defined positions:

- Facing directly ahead
- Facing vertically upwards
- Facing vertically downwards
- Lying on the left side
- Lying on the right side

F.3 Inhalation resistance

Test the inhalation resistance at 30 L/min and 95 L/min continuous flow.

Annex G
(normative)

Clogging test

G.1 Principle

The test aerosols shall be dolomite. A total of 3 particle filtering half masks shall be tested: 1 as received and 2 after temperature conditioning in accordance to Annex A.

The test consist of subjecting the particle filtering half mask to a sinusoidal breathing simulating, whilst the sample is surrounded by known concentration of dolomite dust in air. Following the exposure, the breathing resistance and the filter penetration of the sample particle filtering half mask are measured.

G.2 Test equipment

A scheme typical apparatus is given in Figure 10. The working area of the test chamber has a suggested square section of 650 mm X 650 mm.

The breathing machine has a displacement of 2.0 L/stroke. The exhalation air shall pass a humidifier in the exhaled air circuit, such that the exhaled air temperature, measured at the position of the sample particle filtering half mask is (37 ± 2) °C and 95 % R.H. minimum.

G.3 Test conditions

Dust: DRB 4/15 dolomite

The size distribution of dolomite dust is given in Table G.1.

Table G.1 — Size distribution of dolomite dust

Size (equivalent spherical diameter) µm	% Number particles oversize	Size (stokes diameter) µm	% weight oversize
0.7	100	1	99.5
1	80	2	97.5
2	30	3	95
3	17	5	85
5	7	8	70
9	2	12	26
12	1	18	1

G.4 The particle size distribution of the airborne dust at the working area of the dust chamber is given in Figure 11.

G.5 Procedure

Convey dust from the distributor to the dust chamber where it is dispersed into the air stream of 60 m^3/h.

Fit the sample particle filtering half mask in a leaktight manner to the dummy head or a suitable filter holder located in the dust chamber. Connect the breathing machine and humidifier to the sample and operate for the specified testing time.

The concentration of the dust in the test chamber may be measured by drawing air at 2 l/min through a sampling probe equipped with a pre-weighed, high efficiency filter (open face, diameter 37 mm) located near the test sample, as shown in Figure 10.

Calculate the dust concentration from the weight of dust collected, the flow rate through the filter and the time of collection.

