KENYA STANDARD **KS 2177: 2017**

Kenya Standard **KS 2769-11: 2018**

Admixtures for concrete, mortar and grout Test methods

Part 11: Determination of air void characteristics in hardened concrete

 First Edition 2018

TECHNICAL COMMITEE REPRESENTATION

The following organizations were represented on the Technical Committee:

1. Architectural Association of Kenya
2. Bamburi Cement
3. CHRYSO Eastern Africa Limited
4. Concrete Products (K)Ltd
5. Consumer Information Network
6. Howards Humpreys East Africa LTD
7. Institute of quantity surveyors of Kenya
8. Kenya Industrial Research and Development Institute (KIRDI
9. Kenya Institute of Highways and Building Technology (KIHBT)
10. Ministry of Transport, Infrastructure, Housing and Urban Development.
11. National Environment Management Authority
12. National Housing Corporation
13. Technical University of Kenya
14. University of Nairobi
15. Kenya Bureau of Standards — Secretariat

REVISION OF KENYA STANDARDS

In order to keep abreast of progress in industry, Kenya Standards shall be regularly reviewed. Suggestions for improvements to published standards, addressed to the Managing Director, Kenya Bureau of Standards, are welcome.

Admixtures for concrete, mortar and grout Test methods
Part 11: Determination of air void characteristics in hardened concrete

KENYA BUREAU OF STANDARDS (KEBS)

Head Office: P.O. Box 54974, Nairobi-00200, Tel.: (+254 020) 605490, 602350, Fax: (+254 020) 604031
E-Mail: info@kebs.org, Web:http://www.kebs.org

Coast Region
P.O. Box 99376, Mombasa-80100
Tel.: (+254 041) 229563, 230939/40
Fax: (+254 041) 229448

Lake Region
P.O. Box 2949, Kisumu-40100
Tel.: (+254 057) 23549, 22396
Fax: (+254 057) 21814

Rift Valley Region
P.O. Box 2138, Nakuru-20100
Tel.: (+254 051) 210553, 210555

KS 2177: 2017

Foreword

This Kenya Standard was revised by the Concrete Technical Committee, under the guidance of the standards Projects Committee, and it is in accordance with the procedures of the Kenya Bureau of Standards.

This Kenya Standard is part of the series KS 2769 Admixtures for concrete, mortar and grout — Test methods which comprises the following:

— Part 1: Reference concrete and reference mortar for testing

— Part 2: Determination of setting time

— Part 4: Determination of bleeding of concrete

— Part 5: Determination of capillary absorption

— Part 6: Infrared analysis

— Part 8: Determination of the conventional dry material content

— Part 10: Determination of water soluble chloride content

— Part 11: Determination of air void characteristics in hardened concrete

— Part 12: Determination of the alkali content of admixtures

— Part 13: Reference masonry mortar for testing mortar admixtures

— Part 14: Determination of the effect on corrosion susceptibility of reinforcing steel by potentiostatic electro-chemical test

— Part 15: Reference concrete and method for testing viscosity modifying admixtures

This standard is applicable together with the standards of the series KS 2770 Admixtures for concrete, mortar and grout.

.

Admixtures for concrete, mortar and grout - Test methods - Part 11: Determination of air void characteristics in hardened Concrete

1. Scope

This document describes a test method for determination of the air-void structure in a hardened concrete sample which contains entrained air. The air-void structure is described by means of the following parameters, which are defined in Clause 3.0

i) Total air content

ii) Specific surface of air void system

iii) Spacing factor

iv) Air-void size distribution

v) Micro air content

The method as described is only suitable for use on hardened concrete specimens where the original mix proportions of the concrete are accurately known and the specimen is representative of these mix proportions. This will generally be the case only where the concrete concerned is produced in a laboratory.

2. Normative references

The following referenced documents are indispensable for the application of this document. For dated references, only the edition cited applies. For undated references, the latest edition of the referenced document (including any amendments) applies.

KS 2769, *Admixtures for concrete, mortar and grout — Test methods — Part 1: Reference concrete and* reference *mortar for testing;*

KS 2770, *Admixtures for concrete, mortar and grout — Part 2:* Concrete *admixtures —Definitions, requirements, conformity, marking and labelling*

ISO 1920-3, *Testing of concrete - Part* 3: *Making and curing test specimens*

3. Terms and definitions

For the purposes of this Standard, the following terms and definitions apply.

3.1.
air void
space enclosed by the cement paste that was filled with air or other gas prior to the setting of the paste. This does not refer to voids of submicroscopic dimensions, such as the porosity inherent in a hydrated cement paste. For the purposes of this test method, all voids within the cement paste are considered that are visible at the test magnification with an intercepted chord length of up to 4 mm, other than obvious cracks

3.2.
total air content A
proportion of the total volume of the concrete that is air voids; expressed as a percentage by volume

3.3.
paste content *P*

proportion of the total volume of the concrete that is hardened cement paste, expressed as a percentage by volume. This is the sum of the proportional volumes of cement, mixing water and any admixtures present. For the purposes of this test method it is calculated from the batch weights of the test concrete.

3.4.
specific surface of air void system α
calculated parameter representing the total surface area of the air voids divided by their volume; units are mm ^{1}. The calculation method used is based on the average chord length and is valid for any system of spherical voids

3.5.
spacing factor
calculated parameter related to the maximum distance of any point in the cement paste from the periphery of an air void, measured through the cement paste; units are mm. The calculation of this parameter assumes that all air voids present are of uniform size and are evenly distributed through the cement paste such that the model system has the same total volume and surface area as the real system

NOTE This model is an approximation; the value obtained is probably larger than the actual value.

3.6.
air-void distribution
set of calculated values of the number and/or volume of air voids of various diameters within the hardened cement paste

NOTE The model used for this calculation assumes that only voids having diameters of certain discrete values are present. This model will therefore lie between the real case and the single diameter model that is used in the calculation of the spacing factor. A graphical representation of the distribution can be obtained by plotting the volume of air attributable to each size of void, either as a volume percentage of the cement paste or as a proportion of the total air content.

3.7.
micro air content A_{300}
calculated parameter representing the air content attributed to air voids of 0.3 mm (300 µm) diameter or less. The value for this parameter is obtained during the calculation of the air void distribution

3.8.
traverse line
One of a series of lines across the polished specimen face traced by the relative motion of the microscope and specimen during the test

3.9.
length of traverse T_{tot}
total distance traversed across the surface of the specimens during the test measurement. It is made up of two parts, the total traverse across the surface on solid phases, T_s, and across air voids, T_a, in each case the units are mm

3.10.
chord length l
distance along the traverse line across an air void, units are pm

3.11.
chord length classification
chord lengths across individual air voids are classified into classes based on the length of the chord. The total number of chords in any particular class, *i,* is designated by C_i. in 8.9 and Table 1 contain details of the boundary values for the classes

4. Principle
Hardened samples of air-entrained concrete are sectioned perpendicular to the original free upper surface to produce specimens for analysis. These specimens are then ground and polished to produce a smooth flat surface finish suitable for microscopic investigation.

The air void structure is examined by scanning along a series of traverse lines running parallel to the original free upper surface. The number of air voids intersected by the traverse lines are recorded, as are the individual chord lengths of the traverse across the air voids.

A mathematical analysis of the recorded data then allows a description of the air void system in terms of the required parameters.

Other methods of air void analysis such as the point count method may be used provided that they can be shown to give essentially the same results for the air void parameters required as the method described herein. In the case of dispute the method described in this document shall be used.

5. Equipment

5.1. General

The following list of equipment has been found suitable for this test. Other apparatus may be used if it can be shown to produce satisfactory results. Not all the equipment may be required for individual test measurements.

5.2. Specimen preparation

a) Diamond saw;

b) Grinding machine. One or more instruments able to provide a finished surface of the required quality. These include instruments with a cast iron disc, usually with a minimum diameter of 400 mm, used in conjunction with silicon carbide powder of various grain sizes (typically 120, 60, 30, 16 and 12 µm) or instruments with special grinding discs of the varying grain sizes;

c) Refrigerator and oven;

d) Various chemicals for treatment of the polished surface, including; glycerol, stamp ink (matt or dull black, not water soluble), zinc paste and gypsum powder (grain size ≤3 µm).

5.3. Microscopical analysis

a) A motorised or hand operated cross traverse table. This consists of a platform, on which the specimen rests, which is mounted on lead screws by means of which it can be moved smoothly in two perpendicular directions. One lead screw is required for movement in a direction perpendicular to and two lead screws for movement parallel to the original upper surface. The lead screws should be capable of providing a measure of the total distance travelled to an accuracy of 1 %;

b) Lighting equipment;

c) A means of recording the traverse distances and the total number of air voids traversed, divided into classes based on the individual chord lengths;

d) Stereoscopic microscope, magnification (100 ±10) x. The instrument used must be capable of providing the necessary resolution to classify the chords measured into classes as detailed in section 7.2. Other forms of imaging may be used, such as a television camera mounted on the microscope with linked monitor. In these cases the image used for measurements shall be selected so as to produce results for voids counted which are consistent with those produced using direct visual examination through a microscope.

NOTE Use of imaging systems of other magnification may lead to differences in the diameter of the smallest visible voids. These may lead to counting variations and different values for calculated parameters.

6. Specimen production and preparation

6.1. Specimen production

Two samples, of minimum dimension 150 mm, shall be cast from the concrete under investigation. For testing admixtures in accordance with KS 2769-2 the concrete shall conform with KS 2770-1. Suitable sample geometries include 150 mm cubes or 150 mm diameter cylinders. Manufacture and curing of the samples shall conform with ISO 1920-3.

After the concrete has been cured for a minimum of 7 days, a specimen approximately 100 mm wide by 150 mm high by 20 mm thick shall be cut from the approximate centre of each sample, such that the four cut surfaces are perpendicular to the sample face that was uppermost during manufacture, see Figure 1. One of the largest faces of each specimen is used, after preparation, for microscopic examination.

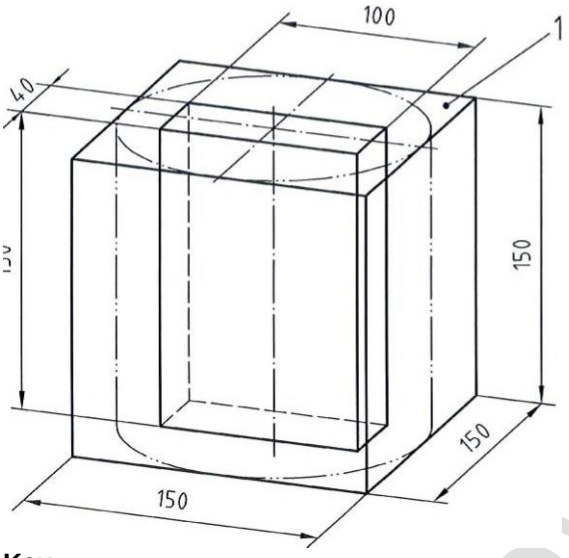

Key
1 Upper face during manufacture (original free upper surface)
Figure 1 — Production of 150 mm x 100 m x 40 mm specimen from 150 mm sample (approximate dimensions)

6.2. Preparation of test surface

The intended test surfaces, one for each specimen, shall be wet ground until they are flat.
After wet grinding, a finely lapped finish to the test surface shall be produced. When this is complete the test surface shall be cleaned to remove any residues.

NOTE The time required for wet grinding depends on the equipment used and will take approximately 5 min. During this procedure, care should be taken to ensure that the test surface and the opposite face of the specimen are as plane parallel as possible.

The exact procedure used will depend on the equipment available. The purpose of the lapping procedure is to produce a surface suitable for microscopic examination of the air void structure within the concrete. A suitable surface should have a matt sheen when dry and have no noticeable relief between the paste and aggregate surface. The edges of voids should be sharp, and should not be broken or rounded. Care should be taken at all stages of the grinding and lapping processes to ensure that voids do not become clogged with grinding residues.

After the fine lapping is complete, the test surfaces should be cleaned to remove any residues. Suitable methods are to use water and compressed air or a suitable fine brush. Care should be taken during the cleaning process to ensure that the edges of the voids are not damaged. This may be of particular importance if ultrasonic cleansing is used.

Reproducible results can be expected only with careful and appropriate fine lapping and cleaning of the test surfaces.

The specimen surface can be treated to produce a better contrast between the air-voids and the cement paste, should this be required by the intended measurement procedure. It is likely that this will be necessary if automatic procedures are to be used. This can be done by first applying ink to the surface of the specimen from a stamp pad or roller. Care should be taken to prevent the ink from sinking into the air-voids. The specimen is then placed in an oven at 50 °C for 4 h. It is then covered with zinc paste and refrigerated before any excess zinc paste is removed. Finally, the surface is covered with fine gypsum powder which is pressed into the zinc paste filled air-voids. The excess gypsum powder is then removed with a scraper.

7. Microscopic procedure

7.1. Basic procedure

The specimens are placed on the cross-traverse table so that the traverse lines which are to be followed run parallel to the original free upper surface of the specimen.

A minimum traverse distance of 1200 mm is required for each specimen, giving a minimum total of 2400 mm per test. A number of traverses across the specimen face are made to give the required total distance. As it is often difficult to ensure a perfect surface finish to the very edge of a specimen, care shall be taken to ensure that any damaged area is not included in the traverse length. The traverse lines shall be laid out as follows, see also Figure 2.

a) Four traverse lines are made in the upper region of the surface, across its width. The uppermost line should be approximately 6 mm from the upper edge of the specimen and subsequent lines should be spaced by approximately 6 mm from each other;

b) A further four traverse lines are made in the lower region of the surface. The lowest line should be approximately 6 mm from the lower edge of the specimen and subsequent lines should be spaced by approximately 6 mm from each other;

c) Further traverse lines are laid out in the central region of the surface, spaced by approximately 6 mm from each other, so as to produce the total traverse distance required. A minimum of four traverse lines will be required in this area, more may be needed to provide the required minimum traverse lengths if damaged areas exist on the surface.

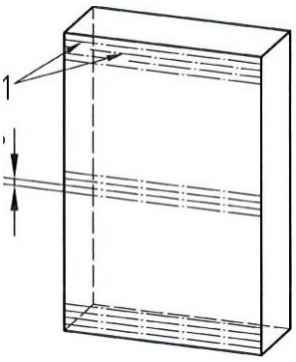

Key
1 Traverse lines at 6 mm separation
Figure 2 — Distribution of traverse lines on the test surface

7.2. Values recorded

The surface shall be viewed through the microscope at a magnification of (100 ±10) x. The magnification shall not be changed during the period of measurement. The sample is viewed along the lines of traverse described in 7.1. During the traverse, the two lead screws for movement parallel to the original free upper surface shall be used to provide separate measures of the total distances traversed across;

a) the solid portions of the specimen surface, T_s;

b) any voids intercepted, T_a;

The sum of these two values gives the total traverse distance, T_{tot};

If the pore size distribution and/or the content of micro pores has to be determined then, in addition, a separate tally of the number of chords produced by the intersection of the traverse lines with air voids shall be kept as follows:

c) estimated length of each chord to the nearest 5 pm;

d) total number of chords in each class, using the class limits given in Table 1 and further explained in 8.9.

This procedure provides a subdivision of all chords occurring into 28 classes of different lengths. This classification can then be used to calculate a corresponding air void distribution. In the counting procedure, include all chords which are across visible voids in the hardened cement paste with a chord length on the traverse line of between 0 and 4000 pm. The only exceptions to this being obvious cracks.

If, in spite of careful grinding, the edges of voids are broken and such a breakage lies on a traverse then the completed circular section shall be used as the basis for determining the chord length. The method of determining the relevant chord length is shown in Figure 3.[1])

[1] Automatic imaging systems will not be able to make this correction and this may lead to errors in the final analysis.

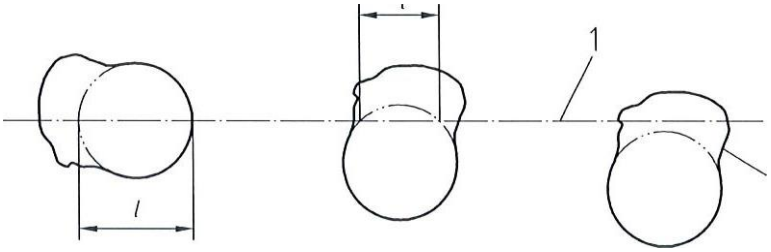

Key
1 Traverse line
2 Zero chord length (*l*)

Figure 3 — Estimation of chord length, l for broken void edges during microscopic examination

8. Calculations

8.1. Data obtained

The following data will be available from values obtained during the test procedure. For the purposes of the calculation, the totals for both specimens for the same test concrete shall be added together.

I) Paste content by volume calculated from the mix proportions, *P*

II) Total length of traverse across solid phases, T_s

III) Total length of traverse across air voids, T_a

IV) The number of individual chords across air voids in the various size classes, C_i

8.2. Total traverse length

This is calculated as the sum of the traverse lengths across the solid phases and the voids.
$T_{tot} = T_s + T_a$ in mm
The total traverse length shall be at least 2400 mm.

8.3. Total air content

This is calculated as the proportion of the total traverse length that was made across voids.

$$A = \frac{T_a \cdot 100}{T_{tot}}$$

expressed as % by volume

8.4. Total number of chords measured

This is calculated as the sum N of the number of chords in each of the size classes.
$N = \sum C_i$

8.5. Specific surface of the air

$$\alpha = \frac{4 \cdot N}{T_a} \text{ in mm}^{-1}$$

(4)

8.6. Paste: air ratio

This is calculated as the ratio R of the volume paste content *P,* determined from the mix proportions, and the total air content *A,* calculated from equation (2).

$$R = \frac{P}{A}$$

8.7. Spacing factor

The equation used for this calculation is dependant on the value of *R* calculated from equation (5).
If *R* > 4.342 then equation (6) shall be used, if *R* ≤4.342 then equation (7) shall be used.

$$\overline{L} = \frac{3\,[\,1{,}4\,(\,1+R\,)^{1/3} - 1\,]}{\alpha} \text{ in mm}$$

or

$$\overline{L} = \frac{P \cdot T_{tot}}{400 \cdot N} \text{ in mm}$$

8.8. Micro-air content

The micro-air content A300 is taken directly from Table 1 as the calculated value in column 10 for class 18 expressed as % by volume.

8.9. Air void distribution

8.9.1. Basis of calculation

The air void distribution is calculated from the distribution of chord lengths measured during the traverse procedure. The calculated distribution is based on a model which assumes only a nominal set of air void diameters are present. The nominal diameters are those corresponding to the maximum chord length in each of the classes.

The required data for this calculation are the total length of traverse, T_{tot}, and the chord length distribution. A worked example is given in Annex B.

8.9.2. Calculation of chord frequency

8.9.3.

The chords measured are divided between a number of classes in Table 1, based on length, recorded to the nearest 5 pm. The class designation numbers and boundaries are given in columns 1 and 2. By comparison with the class boundaries, each chord is placed in a class, for example a chord of length 150 um is placed in class 11. The total number of chords in each class is entered in column 3. The number of chords per millimetre of the traverse line is then calculated by dividing the values in column 3 by T_{tot} and placing the results in column 4.

8.9.4. Calculation of void frequency

Not every void within the cement paste will have been intersected during the traverse, as the traverse lines do not cover the whole volume of the concrete sample. It is therefore necessary to calculate the number of voids per cubic millimetre of concrete so as to be able to determine the air void distribution. It is possible to calculate the fraction of the total number of voids that might contain a chord of a particular length that have been intersected.

The value for this fraction for each class of chord lengths is shown in column 5. Dividing column 4 by column 5 therefore gives the total number of voids within a cubic millimetre of concrete that could contain chords of the particular class. This value is entered into column 6.

NOTE The values in column 5 are constant for all cases and are derived from the equation;

$$\text{Fraction of air voids encountered} = \frac{\pi \cdot (5 + \ell_{max} - \ell_{min}) \cdot (\ell_{max} + \ell_{min})}{4 \cdot 10^6} \quad (mm^2)$$

where

t: $_{ma}$, and ℓ_{min} are the maximum and minimum chord lengths within the class.

The factor of 5 in the numerator of the equation is present due to the rounding of all chords to the nearest **5** pm. The equation itself is based on a statistical evaluation of the void population.

8.9.5. Calculation of void distribution

A chord of any particular length can be found in any void of diameter greater than the chord length. Therefore the value in column 6 for any class includes all voids of diameter greater than the upper limit of that class as well as voids of diameter within that class. To provide a measure of the number of voids of diameter equal to that of the upper boundary of a class the value in column 6 for the next highest class is subtracted from the value for the current class and placed in column 7. For example, the column 7 value for class 10 is derived by subtracting the column 6 value for class 11 from the column 6 value for class 10.

NOTE It is possible, in some cases, for values in column 7, and therefore in those columns subsequently calculated from it, to be negative. This is due to the division of chords into classes and the class boundaries used; it can be avoided if the class boundaries are adjusted appropriately. This will not materially affect the final derived air volume distribution. For calculation purposes the negative value should be retained and not ignored.

8.9.6. Calculation of air content

The total volume of air attributed to each class of voids is calculated by multiplying column 7 by column 8, which contains the volume of one void of the class diameter, to give the air content as a fraction and then multiplying by 100% to express this as a percentage. The result is placed in column 9. The cumulative air content, the running total of column 9, is then placed in column 10.

NOTEThe final total in class 28, Column 10 is nominally the total air content. This should be similar to that calculated in 8.3 but may vary slightly due to the different calculation procedures used.

8.9.7. Presentation of results

The air void distribution can be plotted against nominal air void diameter using values for the upper diameter of each class from column 2 and the value in column 10. This can be plotted either as a cumulative percentage as obtained in column 10 or as a cumulative fraction of the total air content by dividing each value in column 10 by the total calculated air content as represented by the value in column 10 for class 28.

8.9.8. Column Contents

The various columns on Table 1 can be briefly described as follows:

Column 1: The class designation number

Column 2: The upper and lower boundaries of chord length for each class in µm.

Column 3: The number of chords observed for each class.

Column 4: The number of chords per mm of traverse line.

Column 5: The fraction of possible voids that will have been actually counted. This factor has units of mm^2.

Column 6: The total number of voids per mm^3 of concrete containing a chord of the particular class size.

Column 7: The total number of voids of diameter equal to the upper limit of the class per mm^3 of concrete.

Column 8: The volume attributed to each void of a class in mm^3.

Column 9: The total volume attributed to all voids within a class expressed as a percentage of the volume of concrete.
Column 10:A cumulative total air content for air voids up to the current class expressed as a percentage of the volume of concrete.

9. Test report

The test report shall include the following information

- Full details of the mix design of the concrete tested together with details of the density and measured air content of the fresh concrete.
- Details of the calculation of the paste content of the concrete.
- Calculated values for the total air content, specific surface of air void system and spacing factor. **If** required
- Micro air content
- Plot of the air void distribution.

Table 1 - Determination of air void distribution

Total traverse length. T_{tot}

Column	1	2	3	4	5	6	7	8	9	10
Subject	Class	Class width	Recorded number of chords in class	Chord Frequency	Fraction Encountered	Possible Total	Voids in class	Void Volume	Air Content	Cumulative Air Content
Source		The values shown in Columns 1, 2, 5 and 8 do not change from test to test[1])	as measured C_i,	Column 3 divided by T_{tot}	The values shown in Columns 1, 2, 5 and 8 do not change from test to test[1])	Column 4 divided by Column 5	Column 6 minus next value l in Column 6	The values shown in Columns 1, 2, 5 and 8 do not change from test to test[1])	Column 7 multiplied by Column 8 multiplied by 100	Cumulative Total of Column 9
Units		µm		mm^{-1}	mm^2	mm^{-3}	mm^{-3}	mm^3	%	%
	1	0 to 10			0.0001178			5.24x10'		
	2	15 to 20			0.0002749			$4{,}19x10^4$		
	3	25 to 30			0.0004320			$1.41x10^3$		
	4	35 to 40			0.0005890			$3.35x10^3$		
	5	45 to 50			0.0007461			$6.54x10^3$		
		55 to 60			0.0009032			$1.13x10^4$		
		65 to 80			0.0022780			$2.68x10^4$		
		85 to 100			0.0029060			$5.24x10^4$		
		105 to 120			0.0035340			$9.05x10^3$		
		125 to 140			0.0041630			$1.44x10^3$		
	11	145 to 160			0.0047910			$2.14x10^{3--}$		
	12	165 to 180			0.0054190			$3.05x10^3$		
	13	185 to 200			0.0060476			$4.19x10^3$		
	14	205 to 220			0.0066760			$5.58x10^3$		
	15	225 to 240			0.0073040			$7.24x10^3$		
	16	245 to 260			0.0079330			9.20x10		
	17	265 to 280			0.0085610			$1.15x10^3$		
	18	285 to 300			0.0091890			$1.41x10^3$		
	19	305 to 350			0.0257200			$2.24x10^3$		
	20	355 to 400			0.0296500			$3.35x10^3$		
	21	405 to 450			0,0335800			4.77x10		
	22	455 to 500			0,0375000			$6.54x10^3$		
	23	505 to 1000			0.5910000			$5.24x10^1$		
	24	1005 to 1500			0.9837000			1.77		
	25	1505 to 2000			1.3760000			4.19		
	26	2005 to 2500			1.7690000			8.18		
	27	2505 to 3000			2.1620000			$1.41x10^{-1}$		
	28	3005 to 4000			5.5020000			$3.35x10^{-1}$		

1) The columns of1. 2, 5 and 8 do not change from test to test.

Annex A
(informative)

Theoretical basis of calculation involved in Table I

A.1 Introduction

The purpose of the calculation carried out in Table 1 is to derive the distribution of air void diameters from the measured distribution of chords. Once an air void diameter distribution is known then the volume of air entrained can be calculated.

During the linear traverse only those air voids intercepted by the traverse line will be counted in the chord distribution; a large number will not be intercepted and are therefore not included in the chord distribution. The calculations in Table 1 provide a means of estimating the total number of voids from those intercepted by means of a statistical analysis.

A.2 Assumptions

The basic assumption is that no air void is intercepted more than once during the linear traverse. This means that each chord recorded represents a separate air void.

A second assumption, made to ensure an easier calculation procedure, is that the real air void distribution can be represented by a calculated distribution containing air voids of only those diameters listed as the maximum value in each class width (column 2 of Table 1). No extension of this to a true, continuous distribution of air void diameters is given here.

Step 1: Classification of chord lengths and calculation of chord frequency

As the linear traverse is performed, as well as producing a total for the traverse length across air voids, T_a, the individual chords are classified to the nearest 5 pm and recorded in the various classes. The classes are specified in Column 2 of the Table and the number of chords in each class is recorded in Column 3. This classification procedure is the final measurement procedure. The remainder of the table is concerned with calculation.

The first calculation step is to calculate the number of chords in each class detected per mm of total traverse length, T_{10}. This is placed in Column 4. The purpose of this is to provide measurements per unit length to allow future calculations to be made to produce a percentage value for the air content.

Step 2: Calculation of total possible number of chord intercepts

As mentioned above, not all voids will be intersected during the linear traverse. To allow a calculation of the total air content, the fraction of the possible total that have actually been registered must be found. This is possible through the following:

Consider one air void, sufficiently large so as to contain chords between x and x' in length. A diagram representing this void is shown in Figure A.1.

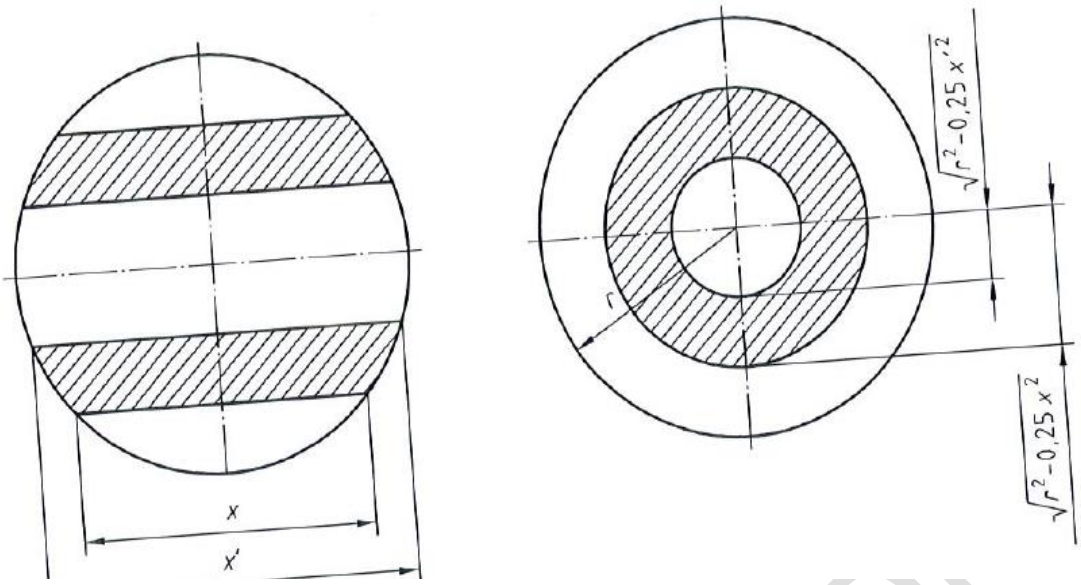

Side view
(along traverse line)

Cross section
(across traverse line)

Figure A.1 — Void geometry

If this was the only void in a mm^3 of concrete, symmetrically placed around the traverse line, then the probability of this void being penetrated by the traverse line to produce a chord within the limits given can be calculated by the cross sectional area of the void which would produce such a chord divided by the total cross sectional area of the volume of concrete considered. The cross sectional area of concrete is 1 mm^2 (10^6 $pm^{2)}$. The relevant cross sectional area of the void can be easily calculated through classical geometry and can be seen to be:

$$\frac{\pi}{4}\cdot(4r^2-x^2)-\frac{\pi}{4}\cdot(4r^2-x'^2) \qquad \text{(A.1)}$$

This can be simplified to:

$$\frac{\pi}{4}\cdot(x'^2-x^2) \qquad \text{(A.2)}$$

and then expanded to:

$$\frac{\pi}{4}\cdot(x'+x)\cdot(x'-x) \qquad \text{(A.3)}$$

This would be exactly correct if the exact chord lengths were used in the classification. However, the chord lengths are recorded to the nearest 5 µm. If x and x' are the real limits of the chords then the class limit boundaries, listed in Table 1, column 2, y and y' are given by:

$x+2.5$ and $y\_ = x\_ - 2.5$ (A.4)

Substituting into the previous equation gives:

$4\ [(y'+2.5)+(y-2.5)]'[(y'+2.5)-(y-2.5)]$ (A.5)

simplifying:

$$\frac{\pi}{4} \cdot (y' + y) \cdot (y' - y + 5) \qquad \text{(A.6)}$$

The probability of intersecting this void, in a total cross section area of 10^6 pm^2, is therefore:

$$\frac{\pi \cdot (y\_ + y) \cdot (y\_ - y + 5)}{4 \cdot 10^6}$$

This value is constant for each class of chords and can be calculated. The calculated values are given in Column 5 of the Table 1. If this is the probability of intersecting one void, it can be used to calculated the total number of voids existing as the number actually penetrated per mm of traverse line (which is the length of line contained in the 1 mm^3 discussed above) is known from Column 4 of the Table 1. The total number of voids existing, which contain potential chords in the group considered, is the number actually recorded divided by the probability of intersecting any single void, i. e. Column 4 divided by Column 5 on the Table 1. The resulting value is entered in Column 6. Because of the boundaries set in the above discussion, these values are the number of chords in each class per mm^3 of concrete.

Step 3: Calculation of total number of voids

Column 6 contains the possible total number of chord intercepts, by class, whether or not actually penetrated during the linear traverse. This is not the same as the total number of voids. Each void can contain chords in a number of chord classes and will therefore have been counted in the above calculation the same number of times as the number of chord classes that it contains. Put another way, a chord in class *n* can be found in voids of diameter *n* and above.

Consider the total number of chords in class 12, this is made up of chords in voids of diameter from the maximum in class 12 up to class 28. If v_n, is taken as the number of voids of diameter *n,* and c_n as the number of chords in class *n,* then:

$C_{12} = V_{12} + V_{13} + V_{14} + \bullet\bullet\bullet + V_{28}$

Similarly:
$C_{13} = V_{13} + V_{14} + \bullet\bullet\bullet + V_{28}$

Therefore:
$V_{12} = C_{12} - C_{13}$

This allows the total number of voids of a particular diameter to be calculated from the total number of chords. This is carried out in Column 7 of the Table 1.

Step 4: **Calculation of air content**

The final step is to calculate the total air content. Column 8 gives the volume of a void of diameter equal to the maximum limit of each class. This, multiplied by the number of voids of that diameter gives the total air volume per mm^3 of concrete as a fraction, multiplying by 100 gives the value as a percentage, which is placed in Column 9. A cumulative air content is then calculated in Column 10.

Annex B
(informative)
Worked example of the calculation of air void distribution

Calculation of air void distribution is described in 8.9 and Table B.1 shows the details of the calculation procedure used. The example only covers the determination of the air void distribution and the micro air content, it does not include the calculation of total air content, specific surface or spacing factor.
Example data for calculation;

a) Total traverse length = 2400 mm

b) Chord length distribution, as recorded in Column 3 of Table B.1.

Table B.1 – Determination of air void distribution

Total traverse length T_{tot}			2400 mm							
Column	1	2	3	4	5	6	7	8	9	10
Subject	Class	Class width	Recorded number of chords in class	Chord Frequency	Fraction Encountered	Possible Total	Voids in class	Void Volume	Air Content	Cumulative Air Content
Source		[1])	as measured C.	Column 3 divided by T_{rot}	[1])	Column 4 divided by Column 5	Column 6 minus next value in Column 6	[1])	Column 7 multiplied by Column 8 multiplied by 100	Cumulative Total of Column 9
Units		pm		mm'	mm^2	mm^{-3}	mm-3	mm^3	%	%
	1.	0 to 10	65	0.02708	0.0001178	229.90945	140.483	$5.24x10^{-7}$	0.007	0.01
	2.	15 to 20	50	0.02458	0.0002749	89.42646	9.372	$4.19x10^{-6}$	0.004	0.01
	3.	25 to 30	83	0.03458	0.0004320	80.05401	6.483	$1.41x10^{-5}$	0.009	0.02
	4.	35 to 40	104	0.04333	0.0005890	73.57102	24.427	$3.35x10^{-5}$	0.082	0.10
	5.	45 to 50	88	0.03667	0.0007461	49.14444	13.161	$6.54x10^{-5}$	0.086	0.19
	6.	55 to 60	78	0.03250	0.0009032	35.98317	11.108	$1.13x10^{-4}$	0.126	0.31
	7.	65 to 80	136	0.05667	0.0022780	24.87562	13.405	$2.68x10^{-4}$	0.359	0.67
	8.	85 to 100	80	0.03333	0.0029060	11.47052	3.925	$5.24x10^{-4}$	0.206	0.88
	9.	105 to 120	64	0.02667	0.0035340	7.54575	2.341	$9.05x10^{-4}$	0.212	1.09
	10.	125 to 140	52	0.02167	0.0041630	5.20458	2.682	$1.44x10^{-3}$	0.386	1.48
	11.	145 to 160	29	0.01208	0.0047910	2.52209	0.600	$2.14x10^{-3}$	0.128	1.61
	12.	165 to 180	25	0.01042	0.0054190	1.92225	0.613	$3.05x10^{-3}$	0.187	1.79
	13.	185 to 200	19	0.00792	0.0060476	1.30906	0.623	$4.19x10^{-3}$	0.261	2.05
	14.	205 to 220	11	0.00458	0.0066760	0.68654	0.230	$5.58x10^{-3}$	0.128	2.18
	15.	225 to 240	8	0.00333	0.0023040	0.45637	0.036	$7.24x10^{-3}$	0.026	2.21
	16.	245 to 260	8	0.00333	0.0079330	0.42019	0.079	$9.20x10^{-3}$	0.073	2.28
	17.	265 to 280	7	0.00292	0.0085610	0.34069	0.114	$1.15x10^{-2}$	0.131	2.41
	18.	285 to 300	5	0.00208	0.0091890	0.22672	0.032	$1.41x10^{-2}$	0.046	2.46[2])
	19.	305 to 350	12	0.00500	0.0257200	0.19440	0.054	$2.24x10^{-2}$	0.121	2.58
	20.	355 to 400	10	0.00417	0.0296500	0.14053	0.016	$3.35x10^{-2}$	0.055	2.63
	21.	405 to 450	10	0.00417	0.0335800	0.12408	0.035	$4.77x10^{-2}$	0.168	2.80
	22.	485 to 500	8	0.00333	0.0375000	0.08889	0.072	$6.54x10^{-2}$	0.471	3.27
	23.	505 to 1000	24	0.01000	0..5910000	0.01692	0.014	$5.24x10^{-1}$	0.753	4.03
	24.	1005 to 1500	6	0.00250	0.9837000	0.00254	0.0010	1.77	0.182	4.21
	25.	1505 to 2000	5	0.00208	1.3760000	0.00151	0.0008	4.19	0.338	4.55
	26.	2005 to 2500	3	0.00125	1.7690000	0.00071	0.0005	8.18	0.420	4.97
	27.	2505 to 3000	1	0.00042	2.1620000	0.00019	0.0002	$1.41x10^{+1}$	0.272	5.24
	28.	3005 to 4000	0	0.0000	5.5020000	0.00000	0.000	$3.35x10^{+1}$	0.000	5.24

[1]) The columns of values 1,2,5,and 8 do not change from test to test

[2]) The boxed value in column 10 is the value for A_{300}