KENYA STANDARD **KS 2835: 2018**

Concrete paving flags — Requirements and test methods

 First Edition 2018

TECHNICAL COMMITTEE REPRESENTATION

The following organizations were represented on the Technical Committee:

1. Architectural Association of Kenya
2. Bamburi Cement
3. CHRYSO Eastern Africa Limited
4. Concrete Products (K)Ltd
5. Consumer Information Network
6. Howards Humpreys East Africa LTD
7. Institute of quantity surveyors of Kenya
8. Kenya Industrial Research and Development Institute (KIRDI
9. Kenya Institute of Highways and Building Technology (KIHBT)
10. Ministry of Transport, Infrastructure, Housing and Urban Development.
11. National Environment Management Authority
12. National Housing Corporation
13. Technical University of Kenya
14. University of Nairobi
15. Kenya Bureau of Standards — Secretariat

REVISION OF KENYA STANDARDS

In order to keep abreast of progress in industry, Kenya Standards shall be regularly reviewed. Suggestions for improvements to published standards, addressed to the Managing Director, Kenya Bureau of Standards, are welcome.

KENYA STANDARD **KS 1933: 2017**

Concrete paving flags — Requirements and test methods

KENYA BUREAU OF STANDARDS (KEBS)

Head Office: P.O. Box 54974, Nairobi-00200, Tel.: (+254 020) 605490, 602350, Fax: (+254 020) 604031
E-Mail: info@kebs.org, Web:http://www.kebs.org

Coast Region
P.O. Box 99376, Mombasa-80100
Tel.: (+254 041) 229563, 230939/40
Fax: (+254 041) 229448

Lake Region
P.O. Box 2949, Kisumu-40100
Tel.: (+254 057) 23549, 22396
Fax: (+254 057) 21814

Rift Valley Region
P.O. Box 2138, Nakuru-20100
Tel.: (+254 051) 210553, 210555

Foreword

This Kenya Standard was prepared by the Concrete and Concrete Products Technical Committee under the guidance of the Standards Projects Committee and it is in accordance with the procedures of the Kenya Bureau of Standards.

During the preparation of this standard, reference was made to the following publications:

BS EN 1339:2003 Concrete paving flags. Requirements and test methods

Acknowledgement is hereby made for the assistance derived from these sources.

Concrete paving flags — Requirements and test methods

1. Scope

This Standard specifies materials, properties, requirements and test methods for cement bound unreinforced concrete paving flags and complementary fittings.

It is applicable to precast concrete paving flags and complementary fittings that are for use in trafficked paved areas and roof coverings.

In case of regular use of studded tyres additional requirements are sometimes needed.

This standard does not deal with the tactility or visibility of flags nor with permeable flags.

This standard provides for the product marking and the evaluation of conformity of the product to this Standard.

2. Normative references

This Standard incorporates by dated and undated references, provisions from other publications. These normative references are cited at the appropriate places in the text, and the publications are listed hereafter. For dated references subsequent amendments to or revisions of any of these publications apply to this European Standard only when incorporated in it by amendment or revision. For undated references, the latest edition of the publication referred to applies (including amendments).

EN 10083-2, Quenched and tempered steels — Part 2: Technical delivery conditions for unalloyed quality steels.

EN 13369, Common rules for precast concrete products.

ISO 4288, Geometric product specification (GPS) - Surface texture - Profile method: Rules and procedures for the assessment of surface texture (ISO 4288:1996).

ISO 6506-1, Metallic materials - Brinell hardness test - Part 1: Test method.

ISO 6506-2, Metallic materials - Brinell hardness test - Part 2: Verification and calibration of testing machines.

ISO 6506-3, Metallic materials - Brinell hardness test - Part 3: Calibration of reference blocks.

ISO 48, Rubber, vulcanised or thermoplastic — Determination of hardness (hardness between 10 IRHD and 100 IRHD).

ISO 4662, Rubber — Determination of rebound resilience of vulcanizates.

ISO 7619, Rubber — Determination of indentation hardness by means of pocket hardness meters.

ISO 7873, Control charts for arithmetic average with warning limits.

ISO 7966, Acceptance control charts.

ISO 8486-1, Bond abrasives — Determination and designation of grainsize distribution — Macrogrits F4 to F220.

3. Terms and definitions

For the purposes of this Standard, the following terms and definitions apply.

3.1.

arris

part of a flag where two faces meet. It can be bevelled, rounded, chamfered, radiussed or splayed

3.2.

concrete paving flag

precast concrete unit used as a surfacing material that satisfies the following conditions:

– its overall length does not exceed 1 m;

– its overall length divided by its thickness is greater than four

NOTE These two conditions are not applicable to complementary fittings.

3.3.

complementary fitting

unit, sometimes a part of a flag, which is used to infill and enable an area to be completely surfaced

3.4.

permeable paving flag

flag intended, by its structure, to allow the passage of water through the flag

3.5.

overall length

longer side of the rectangle with the smallest area able to enclose the flag excluding any spacer nibs

3.6.

overall width

shorter side of the rectangle with the smallest area able to enclose the flag excluding any spacer nibs

3.7.

thickness

distance between the upper face and the bed face of the flag

3.8.

spacer nibs

small protruding profiles on a side face of a flag

3.9.

upper face

surface intended to be seen when in use

3.10.

bed face

surface generally parallel to the upper face and in contact with the bedding after laying

3.11.

facing layer

layer of concrete on the upper face of a flag of different material and/or properties to the main body or
backing layer of a flag

NOTE To be distinguished from wipe, being a fine cement mortar or slurry applied to the surface of the flag.

3.12.

draw

intended angle of the side face from the vertical plane over the full height of a flag as shown in Figure 1

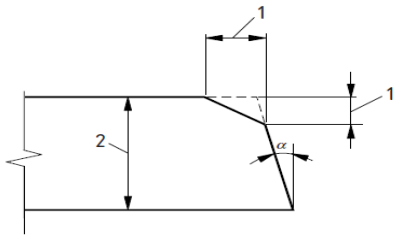

Key

1 Chamfer 2 Thickness α Draw

Figure 1 — Example of chamfer and draw

3.13.

chamfer

bevelled arris, as shown in Figure 1

3.14.

work dimension

any dimension of a flag specified for its manufacture to which the actual dimension should conform within specified permissible deviations

3.15.

secondary processing

manufacturing process to texture the whole flag or any surface, carried out after basic manufacture before or after hardening

3.16.

actual dimension

dimension of a flag as measured

3.17.

chased side face

side face of a concrete paving flag, having a recessed profile

3.18.

skid resistance

ability to resist relative movement between a vehicle tyre and the trafficked concrete paving flag surface

3.19.
slip resistance
ability to resist relative movement between a pedestrian foot and the trafficked concrete paving flag surface

3.20.
format
work dimensions of a flag specified in order of overall length, overall width and thickness

3.21.
wipe
fine cement mortar or slurry applied to the surface of the units

4. Requirements for materials

4.1. General

Only materials with suitability established in terms of their properties and performance shall be used in the manufacture of concrete paving flags. The suitability requirements of the materials used shall be given in the manufacturer's production control documentation.

Where, by conformity with relevant specifications, the properties and performance of materials have been demonstrated, further testing need not be performed.

A reference scheme for materials inspection is given in annex A.

4.2. Asbestos

Asbestos, or materials containing asbestos, shall not be used.

5. Requirements for products

5.1. General

The performance requirements of concrete paving flags are defined by classes which have associated marking designations.

Flags may be produced with a single concrete throughout or with different facing and backing layers. When flags are produced with a facing layer this shall have a minimum thickness of 4 mm over that area claimed by the manufacturer to be faced, when measured in accordance with annex C. Isolated particles of aggregate protruding into the facing layer shall be ignored. The facing layer shall be an integral part of the flag.

An arris described as square may be bevelled or rounded. The horizontal or vertical dimensions shall not exceed 2 mm.

A bevelled arris exceeding 2 mm shall be described as chamfered. Its dimensions shall be declared by the manufacturer.

Flags may be produced with functional and/or decorative profiles, which shall not be included in the work dimensions of a flag.

The surface of flags may be textured, secondary processed or treated chemically; these finishes or treatments shall be described and declared by the manufacturer.

5.2. Shape and dimensions

5.2.1. General

All references to dimensions in this subclause are to work dimensions.

The conformity criteria corresponding to each requirement taken separately are given in 6.3.8.1. The dimensions and deviations shall be measured according to annex C.

5.2.2. Work dimensions

The work dimensions shall be stated by the manufacturer.

5.2.3. Spacer nibs, draw or chased profiled side faces

Flags may be produced with spacer nibs, a draw or chased profiled side faces. When these are provided,
the manufacturer shall declare their work dimensions.

;

5.2.4. Permissible deviations

The permissible deviations on the manufacturer's declared work dimensions are given in Tables 1, 2 and 3.

Table 1 — Permissible deviations

Class	Marking	Flag work dimensions mm	Length mm	Width mm	Thickness mm
1	N	all	±5	±5	±3
2	P	≤600 >600	±2 ±3	±2 ±3	±3 ±3
3	R	all	±2	±2	±2
The difference between any two measurements of the length, width and thickness of a single flag shall be ≤ 3 mm.					

For non-rectangular flags the deviations of the other dimensions shall be declared by the manufacturer. When the length of the diagonals exceeds 300 mm, the maximum permissible differences between the measurement of the two diagonals of a rectangular flag are given in Table 2.

Table 2 — Maximum differences between the measurement of the diagonals

Class	Marking	Diagonal mm	Maximum difference mm
1	J	≤ 850 > 850	5 8
2	K	≤ 850 > 850	3 6
3	L	≤ 850 > 850	2 4

When the maximum dimension of a flag exceeds 300 mm, the deviations for flatness and bow given in Table 3 shall apply to an upper face intended to be plane.

When the upper face is not intended to be plane, the manufacturer shall supply the information on deviations.

Table 3 — Deviations of flatness and bow

Length of gauge mm	Maximum convex mm	Maximum concave mm
300	1.5	1.0
400	2.0	1.5
500	2.5	1.5
800	4.0	2.5

5.3. Physical and mechanical properties

5.3.1. General

The flags shall conform to the following requirements at the time they are declared suitable for use by the manufacturer.

When complementary fittings cannot be tested according to this standard, they are considered to conform to this standard, provided they have at least the same concrete quality as flags complying with this standard.

5.3.2. Weathering resistance

5.3.2.1. Test method

The weathering resistance is determined by tests annex D for water absorption and to the conformity criteria of 6.3.8.2.

5.3.2.2. Performance and classes

The flags shall conform to the requirements in Table 4.

Table 4— Water absorption

Class	Marking	Water absorption % by mass
1	A	no performance
2	B	≤6

5.3.3. Bending strength

5.3.3.1. Test method

The characteristic bending strength shall be determined by testing according to annex D and to the conformity criteria given in 6.3.8.3.

5.3.3.2. Performance and classes

The characteristic bending strength shall not be less than the value corresponding to the class in Table 5.

None of the individual results shall be less than the corresponding minimum bending strength in Table 5.

Table 5 — Bending strength classes

Class	Marking	Characteristic bending strength	Minimum bending strength MPa
1	S	3.5	2.8
2	T	4.0	3.2
3	U	5.0	4.0

Guidance on application may be provided at a national level.

5.3.3.3. Complementary fittings

Complementary fittings are not to be tested but considered to be in the same class as the standard flags, provided they have at least the same concrete strength.

5.3.3.4. Durability of strength

Under normal exposure conditions of use precast concrete flags will continue to provide satisfactory strength, provided they conform to 5.3.3.2 and are subject to normal maintenance.

5.3.4. Abrasion resistance

5.3.4.1. Test method

Abrasion resistance is determined by the Wide Wheel Abrasion test (see annex F), or as an alternative by the Böhme test (see annex G). The Wide Wheel Abrasion test is the reference test.

5.3.4.2. Performance and classes

Requirements for abrasion resistance are given in Table 6. No individual result shall be greater than the required value.

Table 6 — Abrasion resistance classes

Class	Marking	Requirement	
		Measured in accordance with the test method described in annex F	Alternatively measured in accordance with the test method described in annex G
1	F	No performance measured	No performance measured
2	G	≤ 26 mm	≤ 26 000 mm^3/5 000 mm^2 ≤
3	H	≤ 23 mm	20 000 mm^3/5 000 mm^2 ≤18
4	I	≤ 20 mm	000 mm^3/5 000 mm^2

5.3.5. Slip/skid resistance

5.3.5.1. Conditions

Concrete paving flags have satisfactory slip/skid resistance provided that their whole upper surface has not been ground and/or polished to produce a very smooth surface.

5.3.5.2. Test method

If in an exceptional case a value for slip/skid resistance is required, the test method as described in annex H shall be used and the minimum slip/skid resistance value shall be declared.

If the surface of a flag contains ridges, grooves or other surface features which prevent testing by the pendulum friction equipment, the product is deemed to satisfy the requirements of this standard without testing. Where the flag is too small to provide a test area, the manufacturer shall test a larger flag having the same surface finish as the flag in question.

NOTE The slip/skid resistance value relates to flags as manufactured and helps to ensure adequate slip/skid resistance on installation.

5.3.5.3. Durability of slip/skid resistance

Under normal conditions of use precast concrete flags provide satisfactory slip/skid resistance during the working life of the product, provided they are subjected to normal maintenance and unless a major proportion of aggregates which polish excessively have been exposed on the upper face.

5.3.6. Breaking load

5.3.6.1. Test method

The breaking load shall be determined in accordance with the test method described in annex E. The conformity criteria are given in 6.3.8.2.

5.3.6.2. Performance and classes

The flags shall conform to the values indicated in Table 7.

Table 7 — Breaking load classes

Class number	Marking	Characteristic breaking load KN	Minimum breaking load kN
30	3	3.0	2.4
45	4	4.5	3.6
70	7	7.0	5.6
110	11	11.0	8.8
140	14	14.0	11.2
250	25	25.0	20.0
300	30	30.0	24.0
NOTE For design considerations special attention should be given to the possible loading conditions on flags larger than 600 mm.			

5.3.7. Fire performance

5.3.7.1. Reaction to fire

Concrete paving flags are Class A1 reaction to fire without testing.

5.3.7.2. External fire performance

Concrete paving flags used as roof covering are deemed to satisfy the requirements for external fire performance without the need for testing.

5.3.8. Thermal conductivity

If concrete flags are intended to contribute to the thermal performance of an element, then the manufacturer shall declare the thermal conductivity using design data from EN 13369.

5.4. Visual aspects

5.4.1. Appearance

The upper faces of the concrete flags shall not exhibit defects such as cracking, or flaking, when examined in accordance with annex I.

In the case of two-layer flags and when examined in accordance with annex I there shall be no delamination (i.e. separation) between the layers.

NOTE When efflorescence occurs it is not deleterious to the performance of the flags in use and is not considered significant.

5.4.2. Texture

In the case of flags produced with special surface textures, the texture shall be described by the manufacturer.

If examined in accordance with annex I, conformity shall be established if there are no significant differences in texture to any samples supplied by the manufacturer and approved by the purchaser.

NOTE Variations in the texture consistency of the flags can be caused by unavoidable variations in the properties of the raw materials and by variations in hardening and are not considered significant.

5.4.3. Colour

Colours may be provided in a facing layer or throughout the flag at the manufacturer's discretion.

If examined in accordance with annex I, conformity shall be established if there are no significant differences in colour to any samples supplied by the manufacturer and approved by the purchaser.

NOTE Variations in the colour consistency of the flags can be caused by unavoidable variations in the shade and properties of the raw materials and by variations in hardening and are not considered significant.

6. Evaluation of conformity

6.1. General

For the purpose of testing, the manufacturer may group products into families, where it is considered that the value of a selected property is common to all products within that family. Such families are:

1) strength family: flags manufactured using the same type of materials and production methods, irrespective of dimensions and colours;

NOTE Breaking load is dependent upon flag dimensions

2) surface family: flags with face mixes having the same main aggregate used in the mix (e.g. natural river gravel, crushed granite, porphyr, basalt or limestone) and the same surface treatment of the finished product, irrespective of dimensions and colours.

6.1.1. Demonstration of conformity

Conformity of the product with the requirements of this standard and with the declared values (levels or classes) for the product properties shall be demonstrated by carrying out both:

– type testing of the product (see 6.2);

– factory production control (see 6.3), including product testing.

6.1.2. Assessment of conformity

In addition, conformity of the product with this standard may be assessed:

– either by a third party inspecting the manufacturer's type testing and factory production control procedures;

– or by acceptance testing of a consignment at delivery (e.g. in the case of dispute, see annex B).

6.2. Type testing of the product

6.2.1. Initial type testing

Initial type testing shall be performed to demonstrate conformity with this standard at the beginning of the manufacture of a new product type or a family of product types, or setting up a new production line, to confirm that the achieved properties of the product meet the requirements of this standard and the values declared for it by the manufacturer.

Where the product has previously been tested according to this standard, (same product, same characteristics, same or more demanding test method and same sampling procedure), the result may be used to satisfy initial type testing.

6.2.2. Further type testing

Whenever a change occurs in the raw materials, the proportions used or the production equipment or process, which would change significantly some or all of the properties of the finished product, the type tests shall be repeated for the selected property or properties.

NOTE Examples of major changes:

1) change from natural river gravel to crushed rock aggregates or change of cement type or class;

2) partial substitution of cement by additions.

For abrasion and weathering resistance, type testing shall be repeated periodically with the frequency given in Table 8 even when no change occurs.

Table 8 — Periodically repeated type testing

Property	Frequency	
Abrasion (only classes 2, 3 and 4)	Once per year per surface family	
Weathering resistance (only class 3)	Once per year per surface family[1)]	

[1]J If for a surface family the result of a type test (mass loss) is lower than 50 % of the required value the test frequency may be reduced to once per two years.

If for a surface family, routine water absorption testing at the frequency for class 2 products (see 6.3.8.2.) is carried out to demonstrate consistency with flags submitted to freeze thaw testing, the required test frequency may be reduced to once per two years.

If both conditions are met, the test frequency may be reduced to once per four years.

6.2.3. Sampling, testing and conformity criteria

The number of flags to be tested shall be in accordance with Table 9 for the selected property.

Table 9 — Sampling plan and conformity criteria for initial and further type testing

Property	Requirement	Testing method	Number of flags	Conformity criteria
Visual aspects	5.4	Annex I	10[1)]	No flag shall show cracking, flaking or delamination [21]
Thickness of facing layer	5.1	C.6[2)]	8	Each flag shall meet the requirements
Shape and dimensions	5.2	Annex C [2)]	8[1)]	Each flag shall meet the requirements for the declared class
Bending strength	5.3.3 -Table 5	Annex E	8	No flag shall have a bending strength less than the characteristic value for the declared class
Breaking load	5.3.6 - Table 7			No flag shall have a breaking load less than the characteristic value for the declared class
Abrasion resistance (only classes 2, 3 and 4)	5.3.4	Annex F or G	3	Each flag shall meet the requirements for the declared class
Slip/skid resistance (only where tested)	5.3.5	Annex H	5	The mean of the five flags shall be declared
Weathering — class 2	5.3.2	Annex D	3	No flags shall have a water absorption greater than 6 % by mass

[1)] These flags may be used for subsequent tests

[2)] C.6 only applies to flags with a facing layer

The type tests shall be carried out in accordance with the reference test methods called up in thus standard.

Type testing is normally carried out with the manufacturers test equipment

The test results shall be recorded.

6.3. Factory production control

6.3.1. General

The manufacturer shall establish, document and maintain a factory production control system to ensure that the products placed on the market will conform with the specified or declared values.

The factory production control system shall consist of procedures, regular inspection and tests and the utilisation of the results to control raw and other incoming materials, equipment, the production process and the product.

An example of a suitable inspection scheme for factory production control is given in annex A.
The results of inspections requiring action and the results of tests shall be recorded.

The action to be taken when control values or criteria are not met shall be given.

6.3.2. Equipment

All weighing, measuring and testing equipment shall be calibrated and regularly inspected according to thendocumented procedures, frequencies and criteria.

An inspection scheme for equipment is given in A.1.

6.3.3. Raw and other incoming materials

The specifications of all incoming materials shall be documented.

An example of an inspection scheme for raw materials is given in A.2.

6.3.4. Production process

The relevant features of the plant and production process shall be defined giving the frequency of the inspection checks and tests, together with the criteria required both on equipment and on work in progress.

An example of an inspection scheme for the production process is given in A.3.

6.3.5. Product testing

A sampling and testing plan of products shall be prepared and implemented.

The sample shall be representative of production.

The tests shall be carried out in accordance with the methods called up in this standard or by applying alternative test methods with a proven correlation to the standard methods.

The results of testing shall meet the specified conformity criteria (see 6.3.8) and be recorded.

An example of an inspection scheme for product testing is given in A.4.1.

Switching rules for product testing are given in A.5.

6.3.6. Marking, storage and delivery of products

The marking, storage and delivery control, together with procedures for dealing with non-conforming products (see 6.3.7) shall be documented.

Products may be released before the final results of factory production control testing are received, if they are subject to a positive recall procedure.

An example of an inspection scheme for marking, storage and delivery is given in A.4.2.

6.3.7. Non-conforming products

If the results of the tests on a product are unsatisfactory, the manufacturer shall take the necessary steps in order to rectify the shortcoming.

Products which do not conform to the requirements shall be set aside and marked accordingly.

If any non-conformity of the product is established after delivery, the customer shall be notified.

6.3.8. Product conformity criteria

When the conformity criteria in this clause may be considered either by attributes or variables, the method applied shall be at the manufacturer's discretion.

6.3.8.1. Shape and dimensions

A. Attributes

The conformity of the production with 5.2 shall be assessed for each production line per one to four production days depending on the work dimensions of the flags and the needs of delivery (see sampling according to A.4.1.3). Each of the requirements in 5.2 shall be considered separately.

a) If the sample consists of less than eight flags (see switching rules in A.5) and each of the requirements in 5.2 is complied with by all of the flags, then the sample and the corresponding production shall be accepted. If not, this sample shall be increased to eight flags and the procedure given in b) shall apply.

b) If the sample consists of eight flags and not more than one of the flags does not conform to any one of the requirements in 5.2 considered separately for the declared class, the sample and the corresponding production shall be accepted. If not, this sample shall be increased to 16 flags and the procedure given in c) shall be applied.

c) If the sample consists of 16 flags and not more than two of the flags do not conform to any one of the requirements in 5.2 considered separately for the declared class, the sample and the corresponding production shall be accepted. If more than two of the flags do not conform to any one of the requirements considered separately, the sample and the corresponding production are not accepted and 6.3.7 applies.

B. Variables

When the standard deviation of a production line is known and regularly checked, the conformity of the production with 5.2 shall be assessed for each production line per day or consecutive production days not exceeding five (see sampling according to A.4.1.3). Each of the requirements in 5.2 shall be considered separately.

The conformity is assessed on a 10 % fractile.

The acceptability of the samples considered shall be checked using a control chart conforming to either ISO 7966 or ISO 7873 and taking into account 5.2, provided the probability of acceptance is equivalent to that resulting from testing by attributes.

If the sample and the corresponding production are not accepted, 6.3.7 applies.

6.3.8.2. Weathering resistance (class 2 - water absorption)

The conformity of the production with 5.3.2 (class 2) shall be assessed for each family and each five production days, or more according to the switching rules (see sampling according to A.4.1.7).

a) If the sample consists of three or six flags (see switching rules in A.5) and the requirements in 5.3.2 (class 2) are complied with, the sample and the corresponding

production shall be accepted. If not, this sample shall be increased to nine flags and the procedure given in b) shall apply.

b) If the sample consists of nine flags and the sample complies with the requirements in 5.3.2 (class 2), the sample and the corresponding production shall be accepted. If not, the sample and the corresponding production are not accepted and 6.3.7 applies.

6.3.8.3. Bending strength and breaking load

A. Attributes
The conformity of the production with 5.3.3 and 5.3.6 shall be assessed for each production line per one to four production days depending on the work dimensions of the flags, the needs of delivery and the breaking load (see sampling according to A.4.1.5 and A.4.1.6).

a) If the sample consists of eight flags or fewer (see switching rules in A.5) and the strength T and the breaking load of each of the flags is not lower than the characteristic value of Tables 5 and 7 for the declared classes, the sample and the corresponding production shall be accepted. If not, this sample shall be increased to 16 flags and the procedure given in b) shall apply.

b) If the sample consists of 16 flags and the strength T and the breaking load of not more than one of the flags is lower than the characteristic value of Tables 5 and 7 for the declared classes but not lower than the minimum value of Tables 5 and 7 for the declared classes, the sample and the corresponding production shall be accepted. If not, the sample and the corresponding production are not accepted and 6.3.7 applies.

B. Variables
When the standard deviation for a production line is known and regularly checked, the conformity of the production with 5.3.3 and 5.3.6 shall be assessed for each production line per production day or consecutive production days not exceeding five (see sampling according to A.4).

The conformity is assessed on a 5 % fractile.

The acceptability of the samples considered shall be checked using a control chart complying either with ISO 7966 or ISO 7873 and taking into account 5.3.3 and 5.3.6, provided the probability of acceptance is equivalent to that resulting from assessment by attributes (see annex J).

If the sample and the corresponding production are not accepted, 6.3.7 applies.

6.3.8.4. Visual aspects

The conformity of the production with 5.4 shall be assessed in case of doubt (see sampling according to A.4.1.2) The sample tested shall satisfy the requirements of the standard. If not, the sample and the corresponding production are not accepted and 6.3.7 applies.

7. Marking

The following particulars relating to flags shall be supplied:

1	2	
*	*	Identification of the manufacturer or the factory
	*	Identification of the date of production and,
* or *		if delivered earlier than the date on which the flags are declared suitable for use, the identification of this date
*	*	Identification of the class(es) where applicable (see below)
*	*	The number of this European Standard
*		Identification of the product.

1: On the delivery note or on the invoice or on the manufacturer's declaration.

2: On 0.5 % of the flags with a minimum of one marking per package or on the packaging itself if not reused.

Classes and their identification:

Requirement	**Marking**
weathering resistance	A, B or D
abrasion resistance	F, G, H or I
Diagonals	J, K or L (where relevant)
Dimensions	N, P or R
bending strength	S, T or U
breaking load	3, 4, 7, 11, 14, 25 or 30

Where ZA.3 covers the same information as this clause 7, the requirements of this clause are met for CE marked products.

8. Test report

The following particulars shall be supplied in the test report (other than for tests for factory production control):

1) the name of the organization carrying out the test;

2) the name of the person carrying out the test;

3) the date of the test;

4) the name of the source providing the sample;

5) the sample reference including the date of production;

6) the name of the person taking the sample;

7) the relevant KS number and annex;

8) the name of the test;

9) the test result;

10) any pertinent remarks about the sample or test result.

Annex A
(informative)

Inspection schemes

A.1 Equipment inspection

Subject		Aim	Method	Frequency
A.1.1 Testing and measuring equipment				
All testing and measuring equipment		Correct functioning and accuracy	Where applicable calibrating against equipment which has been calibrated traceable to national standards and is used exclusively for this purpose except as indicated in the test method	On (re)installation, after major repair or once per year
A.1. Storage and production equipment				
1	Storage of Materials	Absence of contamination	Visual inspection or other appropriate method	— On installation — Weekly
2	Weighing or volumetric batching equipment	Correct functioning	Visual inspection	Daily
3		Flag manufacturer's declared accuracy	Calibrating against equipment which has been calibrated traceable to national standards and is used exclusively for this purpose	— On (re)installation — Weighing: once a year Volumetric : twice a year — Incase of doubt — In case of doubt
4	Mixers	Wear and correct functioning	Visual inspection	Weekly
5	Moulds	Cleanliness and condition	Visual inspection	Daily

A.2 Materials inspection

	Subject	Aim	Method	Frequency
A.2.1 All materials				
1	All materials	To ascertain that the consignment is as ordered and from the correct source	Inspection of delivery ticket and/or label on the package showing conformity with the order	Each delivery
A.2.2 Materials not submitted to an assessment of conformity before delivery[17]				
1	Cement and other cementitious materials	Conformitywith flag manufacturer's requirements	KS EAS 18	Each delivery
2	aggregates	Conformity with flag manufacturer's requirements	KS 95	Each delivery
3		For example — Particle grading	Test by sieve analysis	— First delivery from new source — In case of doubt — Once per week
		— Impurities or contamination	Appropriate test method	— First delivery from new source — In case of doubt
4	Admixture	Conformity with normal appearance	KS 2670	Each delivery
5		Density	Flag manufacturer's method	
6	Additions/ pigments	Conformity with normal appearance	Visual inspection	Each delivery
7		Density	Flag manufacturer's method	
8	Water not taken from a public distribution system	Conformity with flag manufacturer's requirements	Testing according to standard	— First use of new source — water from open water course: three times a year, or more (depending on local conditions) — Other sources : once a year — In case of doubt
9	Recycled water	Check for solid content and other contaminants	Visual	Weekly
10			Flag manufacturer's method	In case of doubt

[17] Materials not audited by the flag manufacturer or by a third party acceptable to the flag manufacturer.

A.3 Production process inspection

Subject		Aim	Method	Frequency
1	Mixture composition	Conformity with intended composition (weight or volumetric batched)	— Visual on weighing equipment — Checking against production process documents	Daily
2		Conformity with intended mixture values (only volumetric batched)	Fresh concrete analysis	Monthly
3	Fresh concrete	Correct mixing	KS 594	Daily for each mixer
4	Production	Conformity with documented factory	Checking actions against factory procedures	Daily

A.4 Product inspection

Subject		Aim	Method 1	Frequency 1,2,3)
A.4. Product test				
1	Visual aspects	See 5.4	Visual check	Daily
2			Annex I	In case of doubt (sample of ten flags).
3	Shape and dimensions	See 5.2	Annex C	Eight flags per machine and — per production day if work length < 300 mm — per 2 production days if work length 300 mm and < 600 mm — per 4 production days if work length ?_600 mm
4	Thickness of facing layer	See 5.1	Annex C	As for bending strength
5	Bending strength	See 5.3.3 - Table 5	Annex D	Eight flags per strength family per machine and — per production day if both work length and width < 300 mm — per 2 production days if both work length and width 300 mm ands 600 mm — per 4 production days if both work length and width
6	Breaking load	See 5.3.6 - Table 7		
7	Weathering resistance (only class 2)	See 5.3.2	Annex D	Once per surface family per 5 production days (sample of three flags)
A.4.2 Marking, storage, delivery				
1	Marking	Marking of product according to clause 7	Visual check	Daily
2	Storage	Segregation of non-conforming product	Visual check	Daily

3	Delivery	Correct delivery age, loading and loading Documents	Visual check	Daily

[1] Type testing according to 6.2 of this standard not included.

[2] The switching rules apply (see A.5).

[3] See 6.1.

A.5 Switching rules

A.5.1 Normal inspection

The rate of sampling should be in accordance with A.4.1.

A.5.2 Normal to reduced inspection

Reduced inspection corresponds to half the rate of normal inspection[1].

It should be used when normal inspection is effective and the preceding 10 successive samples have been accepted.

A supplementary reduced inspection is allowed if the same conditions as above are satisfied under reduced inspection.

This supplementary reduced inspection should correspond to half the rate of the reduced inspection.

A.5.3 Reduced to normal inspection

When reduced inspection or supplementary reduced inspection is in effect, normal inspection should be reinstated if any of the following occurs.

— a sample is not accepted;

— or the production becomes irregular or delayed;

— or other conditions warrant that normal inspection should be instituted.

A.5.4 Tightened inspection

Tightened inspection requires the number of units in the sample to be doubled.

It should be used if during normal inspection two out of five successive samples fail.

A.5.5 Tightened to normal inspection

Tightened inspection should continue until five successive samples are accepted. Then normal inspection may be resumed.

A.5.6 Stopped production

If production remains on tightened inspection for ten successive samples the production line should be deemed to be out of control and stopped. The production system should be reviewed and any necessary changes made.

Having corrected the production system, production should start again on tightened inspection.

[1] If the number of flags in the sample is even, the reduction should be performed by dividing the number of flags by two. In the other cases, the rate of sampling should be reduced by two.

Annex B

(normative)

Procedure for acceptance testing of a consignment at delivery

B.1 General

The sampling procedure and conformity criteria for a consignment at delivery distinguishes two cases:
— Case I: The product has not been submitted to an assessment of conformity by a third party (see 6.1.1);
— Case II: The product has been submitted to an assessment of conformity by a third party.

If case II applies, acceptance testing is not necessary, except in case of dispute (see 6.1.2). The test for visual aspects shall be carried out prior to the tests for the other properties. The test shall be performed by the purchaser and manufacturer jointly at a location agreed between them, normally the site or factory.

Tests, except for visual aspects, shall be carried out in a laboratory agreed by the purchaser and the manufacturer. They both shall be given a reasonable opportunity to witness the sampling and testing. The tests may be carried out with the manufacturer's reliably calibrated test equipment.

In case of dispute only the contentious property or properties shall be tested.

B.2 Sampling procedure

B.2.1 General

The required number of flags shall be sampled from each batch of the consignment of flags up to the following quantities according to the cases defined in B.1:

— Case I: 1 000 m^2;

— Case II: depending upon the circumstances of the case in dispute, up to 2 000 m^2.

However, a partial batch of the consignment shall be added to the previous full batch when the quantity of the partial batch is less than half of the quantities given above.

The flags for testing shall be selected as being representative of the consignment and shall be evenly distributed through the consignment.

B.2.2 Number of flags to be sampled

The number of flags to be sampled from each batch shall be in accordance with Table B.1.

B.2.3 Sampling plan

B.2.2 Number of flags to be sampled

The number of flags to be sampled from each batch shall be in accordance with Table B.1.

B.2.3 Sampling plan

Table B.1 — Sampling plan

Property	Requirement	Testing method	Case I	Case II [3)]
Visual aspects	5.4	Annex I	8 1)	4 (16)
Thickness of facing layer	5.1	C.6 [2)]	8	4 (16)
Shape and dimensions	5.2	Annex C	8 [1)]	4 (16)
Bending strength	5.3.3 - Table 5	Annex E	8	4 (16)
Breaking load	5.3.6 - Table 7			

Abrasion resistance (only classes 2, 3 and 4)	5.3.4	Annex F or G	3	3
Slip/skid resistance (only where tested)	5.3.5	Annex H	5	5
Weathering resistance — class 2	5.3.2	Annex D	3	3

[1] These flags may be used for subsequent tests.

[2] C.6 only applies for flags with a facing layer.

[3] The number between brackets is the number to be sampled to avoid secondary sampling from the

batch if, on the basis of the conformity criteria (see B.3.2), additional flags shall be tested to assess conformity.

B.3 Conformity criteria

B.3.1 Visual aspects
When required according to 5.4, the texture and colour of the sample shall show no significant difference to any reference sample supplied by the manufacturer and approved by the purchaser.

No flag of the sample tested shall show cracking or flaking. Flags with a facing layer shall not show delaminations.

B.3.2 Other properties
In case I: the conformity criteria for type testing of Table 9 apply.

In case II: the conformity criteria for attributes of 6.3.8 apply for the properties included. For the other properties, the conformity criteria of Table 9 apply.

Annex C
(normative)
Measurement of the dimensions of a single flag
Alternative test methods, e.g. go and no-go gauges, may be used provided at least the same accuracy is achieved as in the following test method.

C.1 Preparation
Remove all flashings and burrs from the flag to be measured.

C.2 Plan dimensions

C.2.1 Apparatus
Measuring equipment capable of measuring with an accuracy of 0.5 mm.

C.2.2 Procedure
Measure the relevant work dimensions in two different places for each dimension and record the actual dimensions obtained to the nearest whole number of millimetres.

For a rectangular flag with a diagonal greater than 300 mm, measure the diagonals and record the difference between the two measurements.

C.3 Thickness

C.3.1 Apparatus

Measuring equipment capable of measuring with an accuracy of 0.5 mm.

C.3.2 Procedure
Measure the thickness of a flag to the nearest millimetre. Take measurements at four points between 20 and 30 mm from the edge and within 100 mm from each corner.

Record the four measurements and calculate the mean thickness to the nearest millimetre. Calculate and record the maximum difference between any two readings to the nearest millimetre.

C.4 Flatness and bow

C.4.1 Apparatus
Measuring equipment capable of measuring with an accuracy of 0.1 mm over the specified length ± 1 mm.

NOTE For example, a notched straight edge and gauge, both made of steel, as shown in Figure C.1.

C.4.2 Procedure
The maximum convex and concave deviations shall be determined along the two diagonal axes of the upper face to the nearest 0.1 mm. Record both results.

C.5 Chamfer

C.5.1 Apparatus

Measuring equipment capable of measuring with an accuracy of 0.5 mm.

NOTE See example given in Figure C.2.

C.5.2 Procedure
Make measurements at four positions on a flag, one on each side. Calculate and record the mean vertical and horizontal dimensions of the chamfer to a whole number of millimetres.

C.6 Thickness of facing layer

C.6.1 Apparatus
Measuring equipment capable of measuring with an accuracy of 0.5 mm.

C.6.2 Procedure
Take a flag which has been broken.

Measure the thickness of the facing layer on the broken face at the point where, by visual inspection, the value will be a minimum. Record the measurement to the nearest millimetre.

The thickness of the facing layer shall not be measured on the chamfer. Isolated particles of aggregate protruding into the facing layer shall be ignored.

C.7 Examples of measuring equipment

C.7.1 Metal rectangular box
A metal rectangular box large enough to enclose a flag. The horizontal base plate and two adjoining vertical sides fixed. The two other vertical sides can be moved horizontally parallel to the fixed sides. The distance between the pairs of parallel sides can be read from a scale to a whole number of millimetres. The construction of the apparatus has to be such that the accuracy of measurements obtained to a whole number of millimetres can be justified.

C.7.2 Notched straight edge and gauge
Dimensions in millimetres

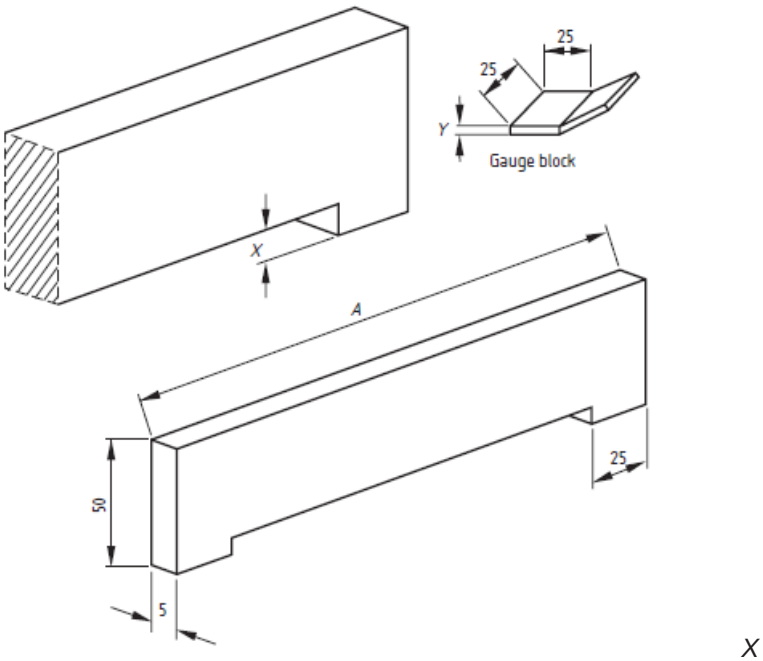

Figure C.1 — Example of a notched straight edge and gauge

Table C.1 — Dimensions of a notched straightedge and gauge

Dimension *A* mm	Dimension *X* mm	Dimension Y mm
300	1.5	2.5
400	2.0	3.5
500	2.5	4.0
800	4.0	6.5

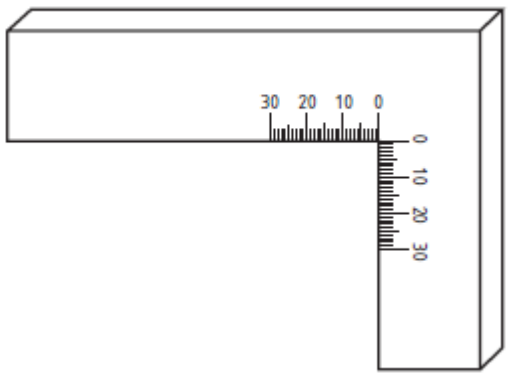

Figure C.2 — Example of a graduated square

C.8 Test report

The test report shall include all the measurements taken.

See also clause 8.

Annex D
(normative)
Determination of total water absorption

D.1 Principle
After conditioning the specimen to (20 ± 5) °C it is soaked to constant mass and then oven dried to constant mass. The loss in mass is expressed as a percentage of the mass of the dry specimen.

D.2 Specimen
If a flag weighs more than 5 kg, it shall be cut to provide a specimen of the full thickness of the flag that weighs more than 2.5 kg but not more than 5.0 kg.

D.3 Materials
Potable water.

D.4 Apparatus

D.4.1 Ventilated drying oven with a capacity in litres over an area of ventilation channels in square millimetres less than 0.2 in which the temperature may be controlled to (105 ± 5) °C. It shall have a volume at least 2½ times greater than the volume of specimens to be dried at any one time.

D.4.2 Flat based vessel having a capacity at least 2½ times the volume of the samples to be soaked and a depth at least 50 mm greater than the height of the specimens in the attitude that they will be soaked.

D.4.3 Balance reading in grams and accurate to 0.1 % of the reading.

D.4.4 Stiff brush.

D.4.5 Cloth.

D.5 Preparation of the test specimens
Remove all dust, flashing, etc. with a brush and ensure that each specimen is at a temperature of (20 ± 5) °C.

D.6 Procedure
Immerse the specimens in potable water at a temperature of (20 ± 5) °C using the vessel until constant mass M_1 is reached. Separate the specimens from each other by at least 15 mm and ensure a minimum of 20 mm water above them. The minimum period of immersion shall be three days and constant mass shall be deemed to have been reached when two weighings performed at an interval of 24 h show a difference in mass of the specimen of less than 0.1 %. Before each weighing wipe the specimen with the cloth which has been moistened and squeezed to remove any excess of water. The drying is correct when the surface of the concrete is dull.

Place each specimen inside the oven in such a way that the distance between each specimen is at least 15 mm. Dry the specimen at a temperature of (105 ± 5) °C until it reaches constant mass M_2. The minimum period of drying shall be three days and constant mass shall be deemed to have been reached when two weighings performed at an interval of 24 hours show a difference in mass of the specimen of less than 0.1 %. Allow the specimens to cool to room temperature before they are weighed.

D.7 Calculation of test results
Calculate the water absorption Wa of each specimen as a percentage of its mass from the equation:

$$W_a = \frac{M_1 - M_2}{M_2} \times 100\%$$

where
M_1 is the initial mass of the specimen (g);
M_2 is the final mass of the specimen (g).

Calculate the water absorption of the sample as the mean of the water absorption of the specimens.

D.8 Test report

The test report shall give the values of water absorption for each of the specimens.

See also clause 8.

Annex E
(normative)
Measurement of bending strength and breaking load

E.1 Apparatus

The transverse testing machine shall have a scale with an accuracy of ± 3 % over the range of the anticipated test loads and be capable of increasing the load at specified rates.

It shall be constructed in such a way that it can induce 3 point bending into the specimen without torsion. The load inducing bar shall be equidistant between the supports.

The length of the supports and the load inducing bar shall be at least equal to the width of the sample to be tested (see Figure E.1).

The upper and lower bearers shall be parallel and rigid and round or rounded to a radius of (20 ± 1) mm.

If packing pieces are used their width shall not exceed 25 mm. Their thickness shall be (4 ± 1) mm and at least 10 mm longer than the size of the anticipated fracture plane.

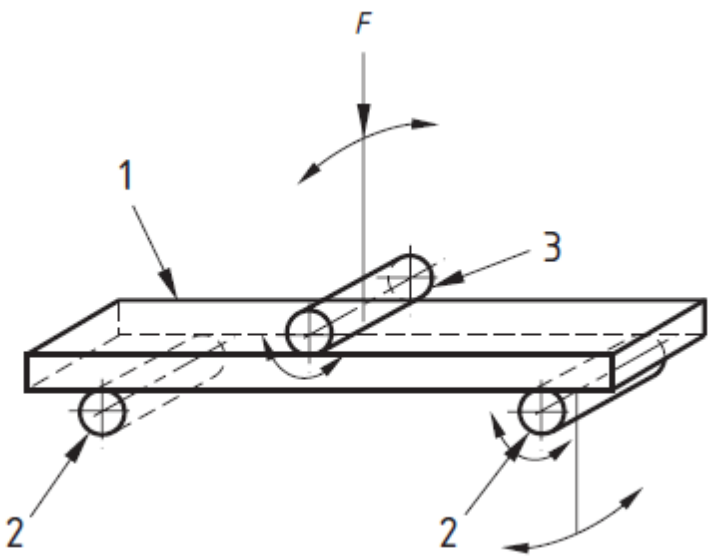

Key
1 Specimen flag
2 Load bearing supports
3 Load inducing bar

Figure E.1 — Principle of testing

The packing pieces shall be made of a material that meets the following hardness criterion: when submitted to a punching test by means of a rod of circular cross section, having a diameter of (16.0 ± 0.5) mm and applying a force at a rate of (48 ± 10) kN/min, the instantaneous penetration when the force of (20 ± 5) kN is achieved shall be equal to (1.2 ± 0.4) mm.

E.2 Preparation

Use whole flags when their plan shape includes at least two parallel straight edges. In other cases use

sawn specimens with the largest possible plan area which includes two parallel straight edges.

If necessary remove any burrs, high spots, etc. Immerse the flags under water at (20 ± 5) °C for (24 ± 3) h, remove, wipe dry and test immediately.

A rough, textured or curved face shall be prepared by grinding or capping. Other methods of preparation may be used for routine testing providing there is a correlation between the results of the two methods, e.g. using unground rough, textured or curved flags instead of ground flags.

NOTE Faces that are not rough, textured or curved may be prepared by grinding or capping

E.3 Procedure

Place the flag in the testing machine. The distance between the load bearing supports and the edge of the flag shall be 25 mm, but if the span be less than three times the thickness, the distance between the load bearing supports and the edge of the flag shall be reduced to half the thickness of the flag.

The span shall be within 0.5 % of the specified span rounded to the nearest millimetre and recorded.

Place the specimen with its upper face uppermost, symmetrically on the load bearing supports of the testing machine and with its shorter side parallel to the load bearing supports.

Depending on the surface profile of the flag any one of the following shall be used at the discretion of the manufacturer:

– no packing;

– packing;

Apply the load without shock and increase the load uniformly so that the breaking load is reached within (45 ± 15) s.

E.4 Calculation of test results

Calculate the strength T in megapascals of the flag tested from the equation:

$$T = \frac{3 \times P \times L}{2 \times b \times t^2}$$

where
T is the strength, in megapascals;

P is the breaking load, in newtons;

L is the distance apart of the supports, in millimetres;

b is the width of the flag at the failure plane, in millimetres;

t is the height of the flag at the failure plane, in millimetres.

NOTE The formula is not applicable for non-rectangular flags.

Record the individual result T and the breaking load in kN.

E.5 Test report

The test report shall include the following information:

a) the strength of the flag to the nearest 0,1 MPa;

b) the breaking load of the flag to the nearest 0.1 kN.

See also clause 8.

Annex F
(normative)

Measurement of abrasion resistance

F.1 Principle of wide wheel abrasion test
The test is carried out by abrading the upper face of a paving flag with an abrasive material under standard conditions.

F.2 Abrasive material
The abrasive required for this test consists of a material comprising fused alumina (corundum) with a grit size of F80 in accordance with ISO 8486-1. It shall not be used more than three times.

F.3 Apparatus
The wearing machine (see Figure G.1) is essentially made of a wide abrasion wheel, a storage hopper with one or two control valves to regulate the output of the abrasive material, a flow guidance hopper, a clamping trolley and a counterweight.

When two valves are used, one shall be used to regulate the rate of flow and can be permanently set while the other is used to turn the flow on and off.

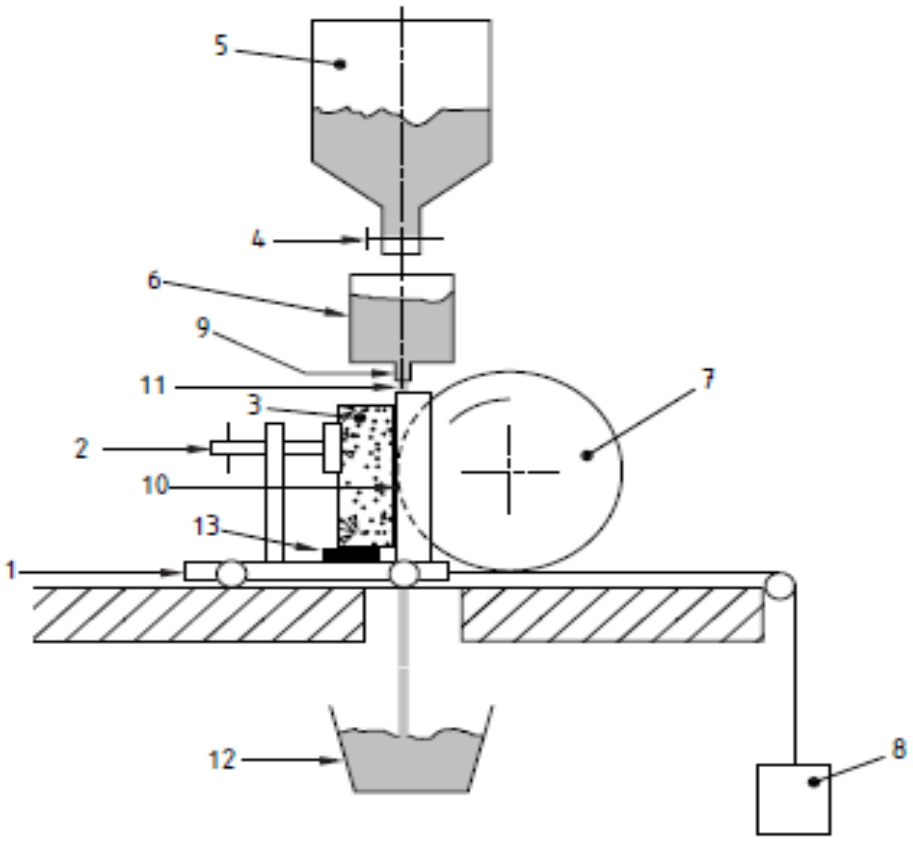

Key

1 Clamping trolley	8 Counterweight
2 Fixing screw	9 Slot
3 Specimen	10 Groove
4 Control valve	11 Abrasive material flow
5 Storage hopper	12 Abrasive collector
6 Flow guidance hopper	13 Wedge
7 Wide abrasion wheel	

Figure F.1 — Principle of wearing machine

The wide abrasion wheel shall be made of a steel conforming to EN 10083-2 and with a Brinell hardness of between 203HB and 245HB (as defined in ISO 6506-1, ISO 6506-2 and ISO 6506-3). Its diameter shall be (200 ± 1) mm and its width shall be (70 ± 1) mm. It shall be driven to rotate 75 revolutions in (60 ± 3) s.

A mobile clamping trolley is mounted on bearings and forced to move forwards to the wheel by a counterweight.

The storage hopper containing the abrasive material feeds a flow guidance hopper.

The flow guidance hopper may be cylindrical and shall have a slotted outlet. The length of the slot shall be (45 ± 1) mm and width shall be (4 ± 1) mm. The body of the flow guidance hopper shall be at least 10 mm bigger than the slot in all directions. In the case of a rectangular hopper with at least one of the sides inclined down to the length of the slot, these dimensional limitations are not necessary (see Figure F.2, example 2).

Dimensions in millimetres

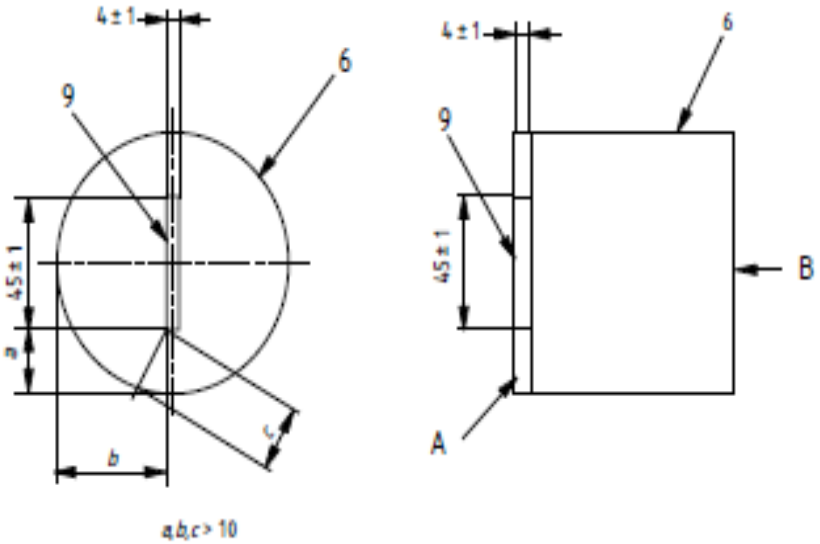

Key
A Vertical side
B Inclined side
See Figure G.1
Figure F.2 — Position of slot in the base of the flow guidance hopper

The distance of the fall between the slot and the axle of the wide abrasion wheel shall be (100 ± 5) mm and the flow of the abrasive shall be 1 mm to 5 mm behind the leading edge of the wheel (see Figure F.3).

Dimensions in millimetres

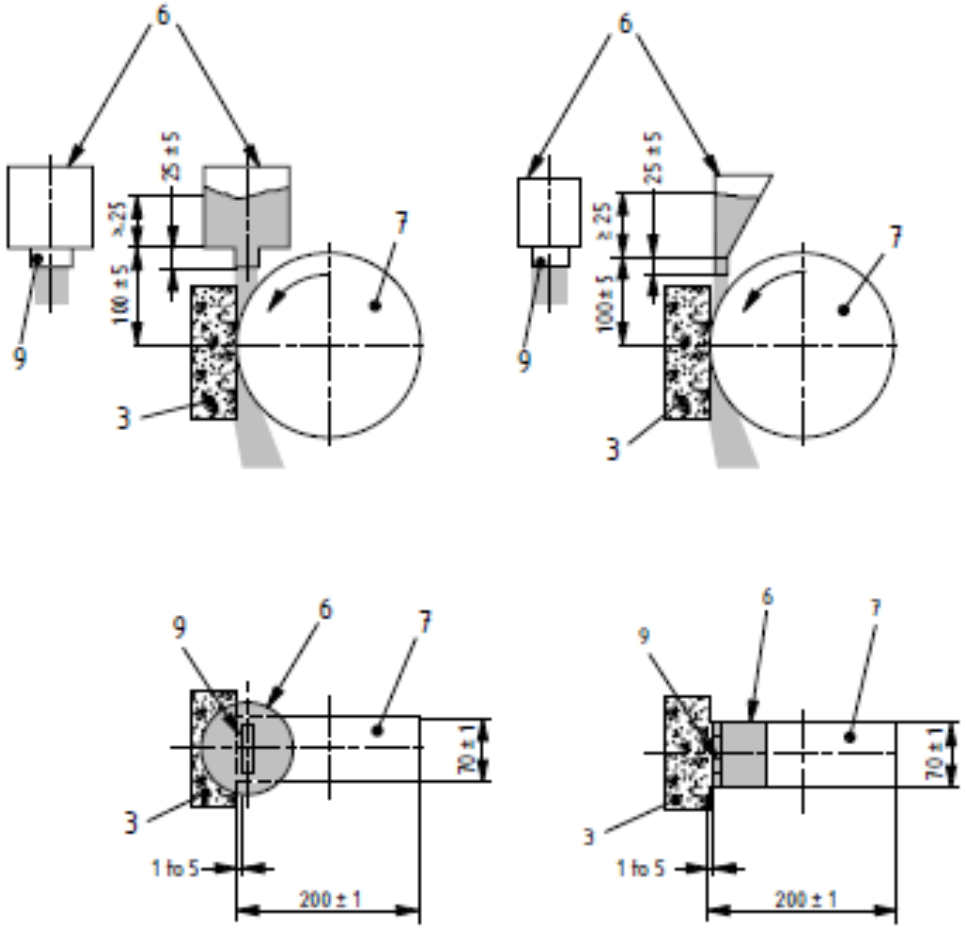

Key
See Figure F.1
Figure F.3 — Position of slot relative to wide abrasion wheel

The flow of the abrasive material from the flow guidance hopper shall be at least at a minimum rate of 2.5 l/min onto the wide abrasion wheel. The flow of abrasive shall be constant and the minimum level of the abrasive in the flow guidance hopper shall be 25 mm (see Figure G.3).

Useful tools for measuring the results are:

– a magnifying glass preferably equipped with a light, a steel ruler and a digital calliper.

F.4 Calibration

The apparatus shall be calibrated after grinding 400 grooves or every two months whichever is the lesser and every time there is a new operator, a new batch of abrasive, or a new abrasion wheel.

The abrasive flow rate shall be verified by pouring the material from a height of approximately 100 mm into a pre-weighed rigid container with a smooth rim, of height (90 ± 10) mm and of known volume when filled to the top, this shall be approximately 1 l. As the container fills, the pourer shall be raised to maintain approximately the 100 mm fall. When the container is filled, the top shall be struck off level and weighed to determine the mass of abrasive for a known volume i.e. the density. Abrasive shall be run through the wearing machine for (60 ± 1) s and collected below the abrasion wheel in a pre-weighed container of at least 3 l capacity. The filled container shall be weighed and from the density determined above, the rate of abrasive flow can be verified as more than or equal to 2.5 l/min.

The apparatus shall be calibrated against a reference sample of 'Boulonnais Marble' using the procedure in G.6 and the counterweight adjusted so that after 75 revolutions of the wheel in (60 ± 3) s the length of the groove produced is (20.0 ± 0.5) mm. The counterweight shall be increased or decreased to increase or decrease the groove length respectively. The clamping trolley/counterweight assembly shall be checked for undue friction.

The groove shall be measured using the procedure in F.7 to the nearest 0.1 mm and the three results averaged to give the calibration value.

An alternative material may be used for the reference sample if a good correlation is established with a reference sample of 'Boulonnais Marble'.

The 'Boulonnais Marble' reference is:

'Lunel demi-clair', thickness: > 50 mm, cut perpendicular to the bedding, ground with a diamond grit size 100/120, roughness: Ra = (1.6 ± 0.4) µm when measured with a rugotest calibrated in accordance with ISO 4288.

At every calibration of the apparatus the squareness of the sample supports shall be checked.

The groove on the reference sample shall be rectangular with a difference between the measured length of the groove at either side not exceeding 0.5 mm. If necessary check that:

– the sample has been held square to the wheel;

– the clamping trolley and the slot from the flow guidance hopper are parallel to the wheel axle;

– the flow of abrasive is even across the slot;

– the friction in the trolley/counterweight assembly is not undue.

F.5 Preparation of the specimen

The test specimen shall be a whole product or a cut piece measuring at least 100 mm x 70 mm incorporating the upper face of the unit.

The test piece shall be clean and dry.

The upper face, which shall be tested, shall be flat within a tolerance of ± 1 mm measured in accordance with C.4 in two perpendicular directions, but over 100 mm.

If the upper face has a rough texture or is outside this tolerance it shall be lightly ground to produce a smooth flat surface within tolerance.

Immediately before testing, the surface to be tested shall be cleaned with a stiff brush and covered with a surface dye to facilitate measuring the groove (e.g. painting with a marker pen).

F.6 Procedure

Fill the storage hopper with dry abrasive material, moisture content not exceeding 1.0 %. Move the clamping trolley away from the wide abrasion wheel. Position the specimen on it so that the groove produced shall be at least 15 mm from any edge of the specimen and fix the specimen on a wedge to let the abrasive flow pass under it. Place the abrasive collector beneath the wide abrasion wheel.

Bring the specimen into contact with the wide abrasion wheel, open the control valve and simultaneously start the motor so that the wide abrasion wheel achieves 75 revolutions in (60 ± 3) s. Check the regularity of the flow of the abrasive material during the test visually. After 75 revolutions of the wheel, stop the abrasive flow and the wheel. Whenever possible two tests shall be performed on each specimen.

F.7 Measuring the groove

Place the specimen under a big magnifying glass nominally at least 2 times magnification and preferably equipped with a light to facilitate the measuring of the groove.

With a pencil with a lead diameter of 0,5 mm and hardness 6H or 7H, draw the external longitudinal limits (I1 and I2) of the groove using a ruler (see Figure F.4).

Then draw a line (A - B) in the middle of the groove perpendicular to the centreline of the groove. Position a digital calliper square tips on the points A and B to the inside edge of the longitudinal limits (I1 and I2) of the groove and measure and record the dimension to the nearest ± 0.1 mm.

For calibration purposes, repeat the measurement (10 ± 1) mm from the ends of the groove (C D) to give three readings.

Dimensions in millimetres

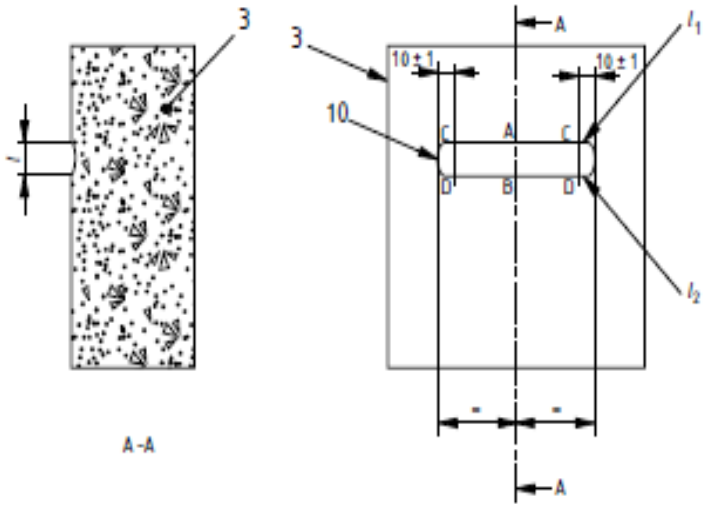

Key
Key: see Figure G.1
Figure F.4 — Example of a tested specimen showing a groove

Some surface dyes may be removed above the groove by action of the abrasive. This shall be ignored in producing line I1 which shall be drawn where the sample surface is abraded.

F.8 Calculation of test results

The result is the dimension corrected by a calibration factor and then rounded to the nearest 0.5 mm. The calibration factor is the arithmetic difference between 20.0 and the recorded calibration value.

If two grooves have been cut in a specimen the larger value shall be taken as the result.

NOTE For example, if the calibration value is 19.6 mm and the dimension is 22.5 mm, the result is 22.5 + (20.0 -19.6) = 22.9 mm, rounded to 23.0 mm.

F.9 Test report

The test report shall include the lengths of the grooves.

See also clause 8.

Annex G
(normative)

Measuring of abrasion according to the Böhme test

G.1 Principle

Square sheets or cubes are placed on the Böhme disc abrader, on the test track of which standard abrasive is strewn, the disc being rotated and the specimens subjected to an abrasive load of (294 ± 3) N for a given number of cycles (see G.5).

The abrasive wear is determined as the loss in specimen volume.

G.2 Abrasive material

The standard abrasive used shall be fused alumina (artificial corundum)[3]) designed to produce an abrasive wear of 1.10 mm to 1.30 mm when testing standard granite specimens and of 4.20 mm to 5.10 mm when testing standard limestone specimens. Conformity with these requirements, the homogeneity of the material and the uniformity of bulk density and grading of the abrasive shall be checked.

G.3 Apparatus

G.3.1 Thickness measuring device. To establish the reduction in thickness, a dial gauge, the plunger of which shall have a spherical bearing and an annular contact face of 8 mm outside and 5 mm inside diameter, and a measuring table, shall be used.

G.3.2 Disc abrader. The Böhme disc abrader as shown in Figure H.1 consists essentially of a rotating disc with a defined test track to receive the abrasive, a specimen holder and a loading device.

G.3.3 Rotating disc. The rotating disc shall have a diameter of approximately 750 mm and be flat and positioned horizontally. When loaded, its speed shall be (30 ± 1) revolutions per minute.

The disc shall be provided with a revolution counter and a device that switches off the disc automatically after 22 revolutions.

G.3.4 Test track. The test track shall be annular, with an inside radius of 120 mm and an outside radius of 320 mm (i.e. be 200 mm wide), and be replaceable.

The track shall be made of cast iron with a perlitic structure, a phosphorus content not exceeding 0.35 % and a carbon content of more than 3 %. The track shall have a Brinell hardness of 190 to 220 HB 2.5/187.5 (as defined in ISO 6506-1, ISO 6506-2 and ISO 6506-3), determined as the mean from measurements taken at not less than ten points along the edge of the track.

The track surface is subject to wear in service; the resulting reduction in thickness shall not exceed 0.3 mm and any grooves not deeper than 0,2 mm. If these values are exceeded, the track shall be replaced or refinished. When the track has been refinished three times, its hardness shall be determined anew.

G.3.5 Specimen holder. The specimen holder shall consist of a U-frame approximately 40 mm high, with a clear distance of (5 ± 1) mm from the test track. The frame shall be positioned so that the centreline distance between specimen and disk is 220 mm and the angle bead of the specimen holder, which supports the specimen, is located at a distance of (4 ± 1) mm above the disk. The mounting of the specimen holder shall ensure that, during testing, no vibration occurs.

G.3.6 Loading device. The loading device shall consist of a lever of two arms of different length, a loading weight and a counterweight, the lever being pivoted with as little friction as possible and positioned almost horizontally during the test. The system shall be designed to ensure that the load is transferred vertically via the plunger to the centre of the specimen. The self-weight of the lever is balanced by the counter-weight and the scale to receive the loading weight. The force acting on the specimen results from the loading weight multiplied by the leverage ratio, the mass of the weight being selected to produce a test force of (294 ± 3) N (corresponding to about 0.06 N/mm^2), which shall be verified by calculation.

Dimensions in millimetres

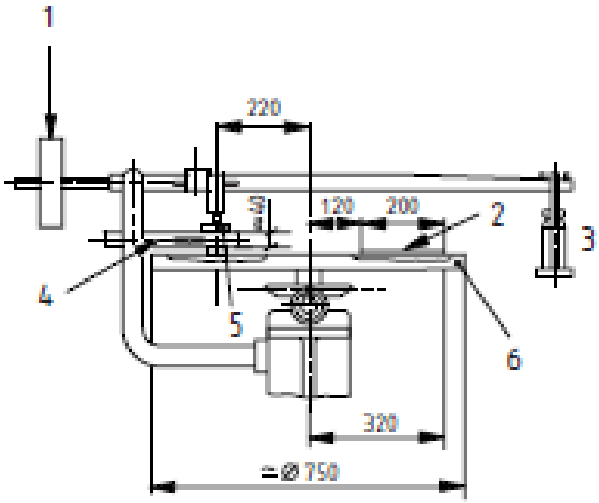

Key
1 Counterweight
2 Test track
3 Loading weight
4 Specimen holder
5 Specimen
6 Rotating disc
Figure H.1 — Principle of Böhme disc abrader

G.4 Preparation of specimens

Use square slabs or cubes with an edge length of (71.0 ± 1.5) mm as specimens.

The contact face and the opposite face of the specimen shall be parallel and flat. For determining the reduction in thickness as described in H.6, the opposite face shall, if appropriate, be ground parallel or otherwise machined so as to be parallel.

Other than as provided below the specimens shall be dried to constant mass at a temperature of (105 ± 5) °C, pregrinding of the contact face by four cycles (see G.5) being usually required.

For the exceptional case of testing specimens in the wet or water-saturated condition (see H.5), the specimens shall be immersed for not less than seven days and wiped with a damp artificial sponge prior to each weighing so that all specimens appear equally damp.

Each specimen shall be taken from no less than three different samples or workpieces of the same type. Prior to testing, determine the density of the specimen, ρ_R, by measurements, to the nearest 0.1 mm, and by weighing, to the nearest 0.1 g.

In the case of two-layer specimens, determine the density for specimens taken separately from the wearing layer, such specimens also being ground prior to testing where necessary.

G.5 Procedure

Prior to the abrasion test and after every four cycles (see H.4), weigh the specimen to an accuracy of 0.1 g.

Pour 20 g of standard abrasive on the test track. Clamp the specimen into the holder and, with the test contact face facing the track, load centrally with (294 ± 3) N.

Start the disc taking care that the abrasive on the track remains evenly distributed over an area defined by the width of the specimen.

Test the specimen for 16 cycles, each consisting of 22 revolutions.

After each cycle, clean both disc and contact face, and turn the specimen progressively through 90° and pour new abrasive on the track as described in H.2.

When testing damp or water-saturated specimens, prior to each cycle, the track shall be wiped with a lightly damp artificial sponge and moistened before being strewn with abrasive. From the start of the test, water shall be caused to drip, at a rate of approximately 13 ml of water (corresponding to 180 drops to 200 drops) per minute onto the track from a container with an adjustable pivoting nozzle. The drops shall fall through a distance of approximately 100 mm on the middle of the track at a point 30 mm in front of the specimen. When testing in accordance with this method, care shall be taken to ensure that the abrasive is continuously returned to the effective area of the track (see G.3).

G.6 Calculation of test results

Calculate the abrasive wear after 16 cycles as the mean loss in specimen volume ΔV, from the equation:

$$\Delta V = \frac{\Delta m}{\rho_R}$$

where

ΔV is the loss in volume after 16 cycles in cubic millimetres;

Δm is the loss in mass after 16 cycles in grams;

ρ_R is the density of the specimen or, in the case of multi-layer specimens, the density of the wearing layer in grams per cubic millimetre.

G.7 Test report

Report the abrasive wear to the nearest whole number of 1 000 mm^3 per 5 000 mm^2.

See also clause 8.

Annex H

(normative)

Method for the determination of unpolished slip resistance value (USRV)

H.1 Principle

The measurement of USRV on the specimen is made using the pendulum friction test equipment to evaluate the frictional properties of the specimen on the upper face.

The pendulum friction test equipment incorporates a spring loaded slider made of a standard rubber attached to the end of the pendulum. On swinging the pendulum the frictional force between the slider and test surface is measured by the reduction in length of the swing using a calibrated scale.

H.2 Apparatus

H.2.1 Pendulum friction tester

H.2.1.1 The pendulum friction test equipment shall be manufactured as shown in Figure I.1. All bearings and working parts shall be enclosed as far as possible, and all materials used shall be treated to prevent corrosion under wet conditions.

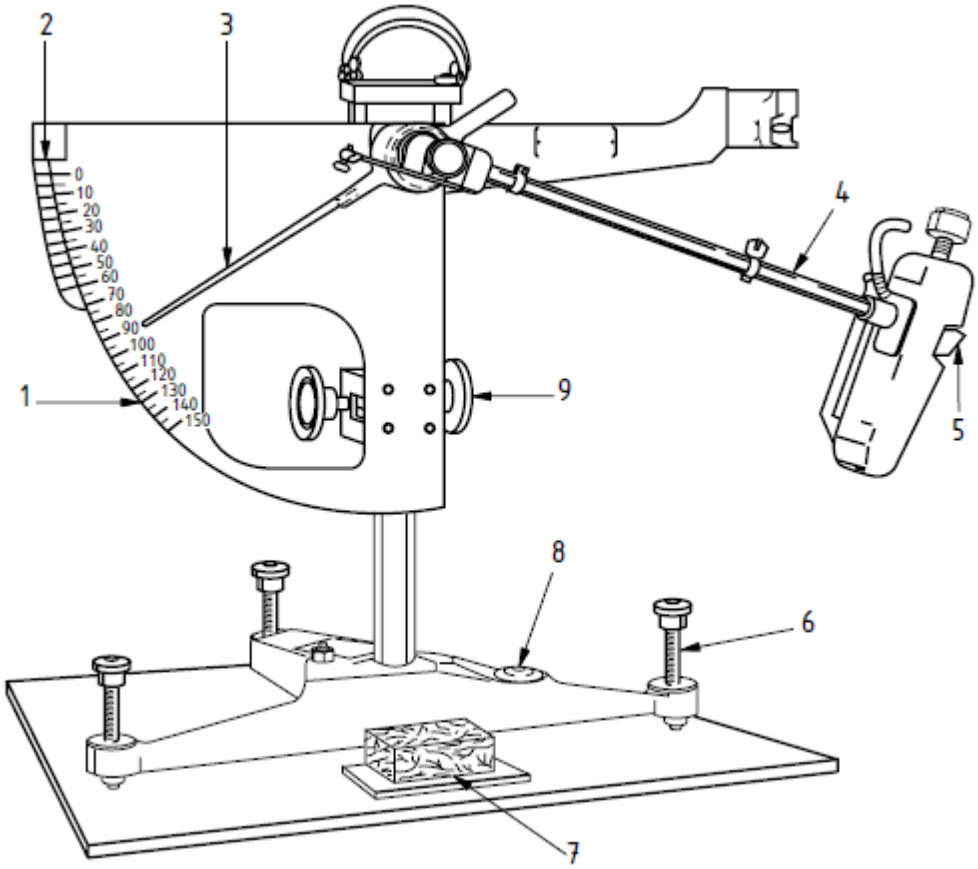

Key
1 C scale (126 mm sliding length)
2 F scale (76 mm sliding length)
3 Pointer
4 Pendulum
5 Rubber slider
6 Levelling screw
7 Test specimen holder
8 Spirit level
9 Vertical adjustment screw

FigureH.1 — Pendulum friction test equipment

H.2.1.2 The pendulum test equipment shall have the following features:

1) a spring loaded rubber coated slider as specified in H.2.1.4 to H.2.1.10. It shall be mounted on the end of a pendulum arm so that the sliding edge is (510 ± 1) mm from the axis of suspension;

2) means of setting the support column of the equipment vertical;

3) a base of sufficient mass to ensure the equipment remains stable during the test;

4) means of raising and lowering the axis of suspension of the pendulum arm so that the slider can:

– swing clear of the surface of the specimen; and

– be set to traverse a surface over a fixed length of (126 ± 1) mm. A gauge with this distance marked is required as shown in Figure H.2.

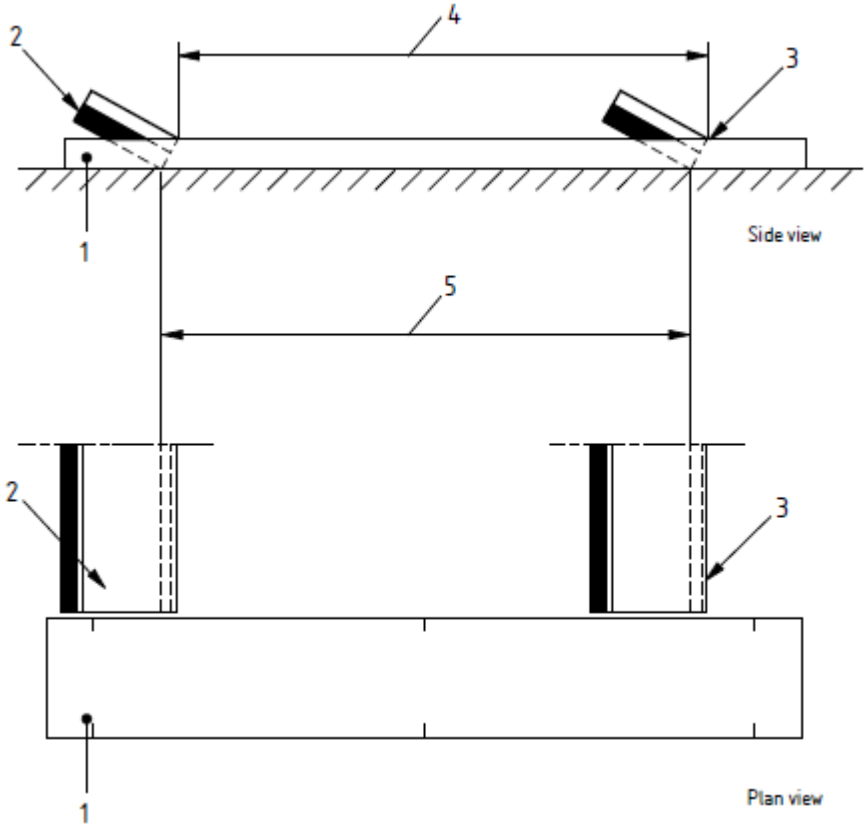

Key
1 Gauge
2 Slider
3 Reference edge
4 Sliding length measured
5 Actual sliding length
Figure H.2 — Sliding length gauge

5) Means of holding and releasing the pendulum arm so that it falls freely from a horizontal position;

6) A pointer of nominal length 300 mm, balanced about the axis of suspension, indicating the position of the pendulum arm throughout its forward swing and moving over the circular scale. The mass of the pointer shall be not more than 85 g;

7) The friction in the pointer mechanism shall be adjustable so that, with the pendulum arm swinging freely from a horizontal position, the outward tip of the pointer may be brought to rest on the forward swing of the arm at a point (10 ± 1) mm below the horizontal. This is the 0 reading;

8) A circular C scale, calibrated for a sliding length of 126 mm on a flat surface, marked from 0 to 150 at intervals of five units.

H.2.1.3 The mass of the pendulum arm, including the slider, shall be (1.50 ± 0.03) kg. The centre of gravity shall be on the axis of the arm at a distance of (410 ± 5) mm from the axis of suspension.

H.2.1.4 The wide slider shall consist of a rubber pad (76.2 ± 0.5) mm wide; (25.4 ± 1.0) mm long (in the direction of swing) and (6.4 ± 0.5) mm thick, the combined mass of slider and base shall be (32 ± 5) g.

H.2.1.5 The slider shall be held on a rigid base with a centre pivoting axis which shall be mounted on the end of the pendulum arm in such a way that, when the arm is at the lowest point of its swing with the trailing edge of the slider in contact with the test surface, the plane of the slider is angled at (26 ± 3)° to the horizontal. In this configuration the slider can turn about its axis without obstruction to follow unevenness of the surface of the test specimen as the pendulum swings.

H.2.1.6 The slider shall be spring-loaded against the test surface. When calibrated, the static force on the slider as set by the equipment calibration procedure shall be (22.2 ± 0.5) N in its median position. The change in the static force on the slider shall be not greater than 0.2 N per millimeter deflection of the slider.

H.2.1.7 The initial resilience and hardness of the slider shall conform to Table H.1, and shall have a certificate of conformity including the name of the manufacturer and date of manufacture. A slider shall be discarded when the IRHD value measured in accordance with ISO 7619 fails to conform to the requirements of the table or not later than three years after manufacture.

Table H.1 – Properties of the slider rubber

	Temperature °C				
Property	0	10	20	30	40
Resilience (%)	43 to 49	58 to 65	66 to 73	71 to 77	74 to 79
Hardness (IRHD) [2)]	53 to 65				

[1] Rebound test in accordance with ISO 4662.
[2)] International Rubber Hardness Degrees in accordance with ISO 48.

H.2.1.8 The edges of the slider shall be square and clean-cut, and the rubber free from contamination by, for example, abrasive or oil. The slider shall be stored in the dark at a temperature in the range 5 °C to 20 °C.

H.2.1.9 Before using a new slider it shall be conditioned to produce a minimum width of striking edge of 1 mm as shown in Figure I.3.

This shall be achieved by setting up the tester and carrying out five swings on a dry surface with a friction value above 40 on the C scale followed by a further 20 swings on the same surface after wetting.

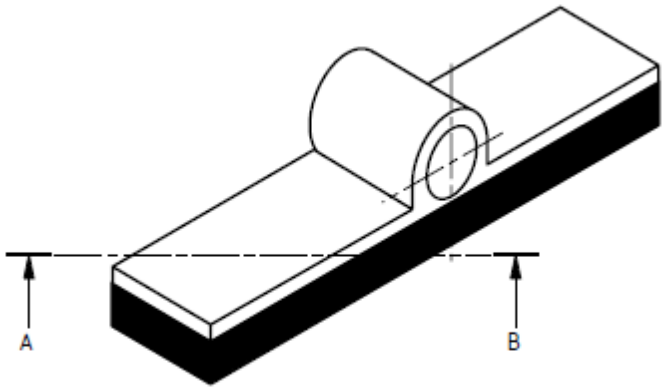

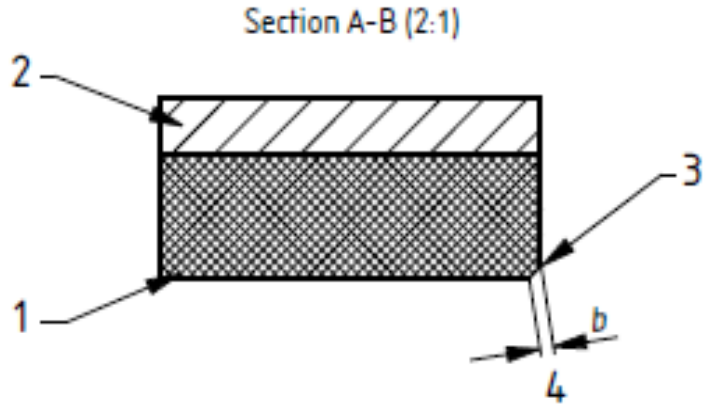

Key
1 Rubber slider
2 Aluminium backing
3 Striking edge
4 Worn width

Figure H.3 — Slider assembly illustrating the maximum wear of striking edge

H.2.1.10 The slider shall be discarded when the width of the striking edge as shown in Figure H.3 exceeds 3 mm or becomes excessively scored or burred. The slider can be reversed to expose a new edge, which will need to be conditioned.

H.2.2 A container with potable water at (20 ± 2) °C for wetting the surfaces of the test specimen and slider.

H.3 Calibration
The apparatus shall be recalibrated at least annually.

H.4 Sampling
Obtain a representative sample of five flags of the same surface family.

Each flag in the sample shall permit a test area of 136 mm x 86 mm which is representative of the whole flag. This area shall be tested using the 76 mm wide slider over a nominal swept length of 126 mm, readings being taken on the C scale.

In the case of large flags, representative samples shall be cut from them for test.

H.5 Procedure
Keep the friction test equipment, and slider, in a room at a temperature of (20 ± 2) °C for at least 30 min before the test begins.

Immediately prior to testing with the friction tester, immerse the sample in water at (20 ± 2) °C for at least 30 min.

Place the friction tester upon a firm level surface and adjust the levelling screws so that the pendulum support column is vertical. Then raise the axis of suspension of the pendulum so that the arm swings freely, and adjust the friction in the pointer mechanism so that when the pendulum arm and pointer are released from the right-hand horizontal position the pointer comes to rest at the zero position on the test scale.

Before using a new slider condition it using the method described in H.2.1.9.

Discard any slider that exceeds the requirements given in H.2.1.10.

Rigidly locate the test specimen with its longer dimension lying in the track of the pendulum, and centrally with respect to the rubber slider and to the axis of the suspension of the pendulum. Ensure that the track of the slider is parallel to the long axis of the specimen across the sliding distance. Adjust the height of the pendulum arm so that in traversing the specimen the rubber slider is in contact with it over the whole width of the slider and over the specified swept length. Wet the surfaces of the specimen and the rubber slider with a copious supply of water, being careful not to disturb the slider from its set position. Release the pendulum and pointer from the horizontal position, catch the pendulum arm on its return swing. Record the position of the pointer on the scale (the pendulum test value). Perform this operation five times, rewetting the specimen each time, and record the mean of the last three readings. Relocate the specimen after rotating through 180 ° and repeat the procedure.

H.6 Calculation of test results

When the wide slider is used over a swept length of 126 mm, calculate the pendulum value of each specimen as the mean of the two recorded mean values measured in opposite directions to the nearest 1 unit on the C scale.

The USRV is the mean pendulum value obtained on the 5 specimens.

H.7 Test report

The test report shall include the following information:
1) the mean pendulum test value of each specimen;
2) the mean USRV of the sample.

See also clause 8.

Annex I
(normative)

Verification of visual aspects

I.1 Preparation

Lay out close together the samples at floor level in a shape approximating to a square after examining each unit for delamination.

I.2 Procedure

In natural daylight conditions an observer shall stand in turn at a distance of 2 m from each edge of the square and record any flag showing cracks or flaking.

Compare the texture and the colour with the manufacturer's sample.

Annex J
(informative)

Example of the application of the method for the evaluation of conformity of either bending strength or breaking load by variables (6.3.8.3.B)

J.1 General

For factory production control by the manufacturer conformity may be determined either by attributes or by variables (see 6.3.8.3 B).

Based on the measuring of either bending strength or breaking load the flow-chart (see Figure J.1) herewith shows the possible "routes": either by attributes or by variables; but it is always started by attributes because the variables route needs enough results to calculate the standard deviation.

The probability of acceptance is to be equivalent to that resulting from testing by "Attributes" (6.3.8.3 A).

J.2 Basic formula

The basic formula to check the conformity of a given production is for three strength classes:

Class 1: $\overline{X}_n \geq 3{,}5 + q_n \times s$ (MPa)

Class 2: $\overline{X}_n \geq 4{,}0 + q_n \times s$ (MPa)

Class 3: $\overline{X}_n \geq 5{,}0 + q_n \times s$ (MPa)

$\overline{X}_n$ = the mean of the production sample of n products

q_n = acceptance factor

s = standard deviation for the production machine

J.3 Acceptance factors

Depending on the number of samples the acceptance factors are:
n = 4 $q_4 = 0.9$
n = 2 $q_2 = 0.6$
n = 16 $q_{16} = 1.3$

J.4 Standard deviations s

Different methods may be used for the determination of the standard deviation s depending on the accuracy needed.

The minimum number of results to determine the standard deviation depends on the process stability: commonly 30 results are used, but if the stability is proved 15 may be enough. These results (30 or 15) should be gathered from tests of a representative production period, e.g. 4 production days 8 results or 4 results per day.

At regular intervals the standard deviation should be checked.

J.5 Application of switching rules

When the production is under control, the number of samples tested decreases.

That is logical, because the probability to produce defectives decreases. The switching rules are given in A.5.

J.6 Results

If the result of using the formula in J.2 is positive and no individual result T is below 2.8 MPa, 3.2 MPa or 4.0 MPa respectively according to the strength class, the corresponding production complies with the requirements of this standard.

If the results do not meet the requirements, 6.3.7 applies.

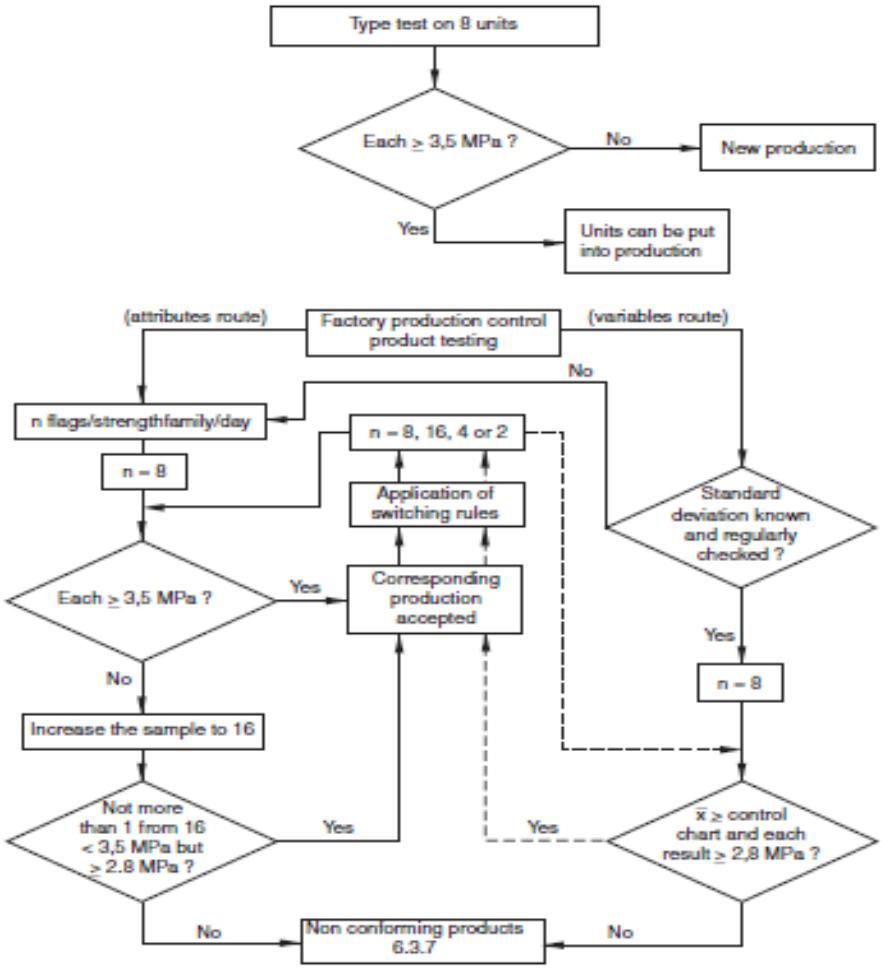

Figure K.1 — EN 1339 bending strength example for class 1 in Table 5

Figure J.1 — EN 1339 bending strength example for class 1 in Table 5