هيئة الإمارات للمواصفات و المقاييس

Emirates Authority for Standards & Metrology

(ESMA)

المواصفات القياسية الإماراتية

UAE.S XXXX : 2020

أنظمة الإطفاء الذاتي لحرائق غرف محركات الحافلات

Fire suppression systems intended for engine compartments of buses and coaches

20 November, 2019

Table of contents

Fire suppression systems intended for engine compartments of buses and coaches

1. Scope

This standard covers automatic fire suppression systems intended for installation in engine compartments of buses and coaches.

The standard applies to new and existing buses of single-deck, double-deck, rigid or articulated specifically buses having a capacity exceeding 8 passengers in addition to the driver (Class I, Class II and Class III).

2. Fire testing

A complete fire suppression system, representative to what is used in practice, must be tested in accordance with the fire testing procedure described in Annex 1.

The test method is applicable to fire suppression systems intended for diesel-fueled buses and coaches with engine compartments having a gross volume between 2 m^3 – 6 m^3. Within this range of engine compartment size, the suppression systems can be scaled based on the test result.
Outside of this gross volume range, scaling should be adapted to the design of the engine compartment and a special approval from the accredited third-party testing laboratory for the installation design is needed.

3. Component testing

The robustness of the included components in the fire suppression system must be verified and tested through international standards, as specified IN Annex 2, by independent accredited testing laboratories according ISO 17025. The component testing will:

- secure survivability of the system and its components;
- secure that the system with included components will not fail before it is activated and discharged;
- secure that the system remains operational after being exposed to vibration, temperature changes and corrosion etc.

The requirements can be found in Annex 2. If not stated otherwise, it is acceptable for new components to be used for every component test.

4. Test reports

The test reports shall as a minimum include the following information:

- Name and address of the testing laboratory
- Date and identification number of the test report

- Name and address of the client
- Date of test
- Name or other identification marks of the tested product
- Detailed drawing of the test set-up
- Description of the tested product:
    - Drawing(s) or pictures of the tested product
    - Description
    - Specification of included material
- Total amount of suppression agent and propellant gas
- Number and types of used nozzles
- Identification of the test equipment and used instruments
- Deviations from the test method, if any
- Photos from the tests
- Test results
- Date and signature

5. Risk assessment

The fire suppression system shall be installed according to the system manufacturer's installation manual.
A risk assessment shall be made prior to equipment being placed into service. Its main purpose is to demonstrate that the system design corresponds to the test reports.

A risk assessment shall further be made when variations in design, use condition and environment, could change the fire risk potential or system performance. In practice this means that a risk assessment would have to be carried out for each new engine compartment configuration.
The system shall be ensured to work properly regardless of the vehicle's attitude.
In the risk assessment, fire hazards and dangers related to efficient use of the extinguishment system shall be identified and documented together with a description on how each hazard is handled.

The fire hazard analysis shall, as a minimum, consider the following:

(a) determination of the location and direction of the suppression agent discharge point(s) (e.g. nozzles, extinguishing agent generators or extinguishing agent discharge tube or other distribution points);
(b) identification of potential fire hazards within the engine compartment and each compartment where a combustion heater is located, must be conducted and the discharge point(s) located such that the suppression agent will be distributed to cover the fire hazard when the system activates;
(c) the spray pattern and direction of discharge points, as well as the discharge distance - shall be ensured to cover identified fire hazards;
(d) those components whose surface may reach temperatures above the auto-ignition temperature for fluids, gases or substances that are present within the compartment;
(e) electrical components and cables with a current or voltage high enough for an ignition to occur;

(f) hoses and containers with flammable liquid or gas (if those are pressurized);
(g) the gross volume of the engine compartment;
(h) the protected fire risks in the engine compartment;
(i) installation drawings including placement of extinguisher agent container, pressure vessel, controller, piping systems, detection system, hoses, etc.;
(j) mass of suppression agent;
(k) the type of nozzle (article number) and mass of nozzles;
(l) nozzle location and direction;
(m) the lowest and highest approved system pressure;
(n) system operating temperature range;
(o) estimation of the minimum temperature the suppression system may be activated at and calculated system pressure at this temperature;
(p) estimation of maximum temperature the suppression system may be activated at and calculated system pressure at this temperature;
(q) estimation of maximum air flow rate through the engine compartment

The risk assessment shall be made by personnel having documented experience for the task. The suppression system manufacturer shall either be directly involved in the risk assessment or indirectly through an organization appointed to the task by the suppression system manufacturer.

The fire risk management process shall be fully documented for the life of the equipment (e.g. maintenance requirements) and be available to the relevant parties as well as at the at follow-up inspections/audits.

6. Scaling of system

The suppression system shall be scaled from the tested system, based on the total gross volume of the engine and combustion heater compartments where the system is to be installed. When measuring the engine compartment and the combustion heater compartments, the gross volume of these compartments shall be measured, i.e. the volume of the engine and its components shall not be subtracted.

The scaling of the system includes the mass of the suppression agent, all discharge points and the mass of the propellant gas container, if applicable. The system pressure shall remain the same as in the tested system. If the system includes a discharge tube for the extinguishing agent, the length of the tube shall be scaled without nozzles. It is acceptable if the suppression system has more extinguishing agent and/or more discharge points and/or a longer discharge tube for the extinguishing agent and/or more propellant gas than required according to the scaling models found below.

If the gross volume of the engine and combustion heater compartments exceed 4 m^3, the suppression system shall be scaled up using the following scaling factor calculated in (1) below. If the gross volume is less than 4 m^3, it is allowed to scale down the suppression system using the scaling factor (2) below. S_x denotes the scaling factor and x denotes the total gross volume including the engine and combustion heater compartments [m^3].

$S_x = 0{,}1 \cdot x + 0{,}6$ (1)
$S_x = 0{,}15 \cdot x + 0{,}4$ (2)

The scaled number of nozzles or other discharge points, if the suppression system has more than one discharge point may be rounded to the closest whole number.

7. Fire detection

Buses and coaches shall be equipped with an automatic fire detection system alarm system in toilet compartments, driver's sleeping compartments and other separate compartments. Upon detection, the system given shall provide the driver with both an acoustic and a visual signal in the driver's compartment and shall activate the hazard warning signal as well as activating the fire suppression system. The alarm system shall be at least operational whenever the engine start device is operated, until such time as the engine stop device is operated, regardless of the vehicle's attitude.

8. Installation

The manufacturer shall provide the installer a design manual in compliance with Annex 3. The installer shall be approved/licensed by the manufacturer. After each installation the installer shall sign a declaration where he declares that the system is installed and checked according to the risk assessment and the manufacturer’s design manual. The declaration shall be available at follow-up inspections/audits.

9. Marking

Products entitled to display ESMA symbol shall have a marking designed as the figure below. The marking shall be legible and durable and shall be applied in conjunction to the engine compartment.

نظام إطفاء الحرائق معتمد وفق المواصفة الإماراتية رقم *UAE .S xxxx* اسم المنتج الرقم التسلسلي اسم الشركة المصنعة	*Fire suppression system approved as a component with regard to UAE .S xxxx* Product name Serial number Name of manufacturer

10. Compliance Follow-up

The product installation documentation and components will be reviewed when the certificate is renewed. Installation guides according to the requirements of this standard shall be documented and available for audit

11. Changes to tested and approved products

No changes may be made to the product that has been tested and approved, without being evaluated and approved by ESMA.

Therefore, the manufacturer shall notify the Emirates Authority for Standardization and Metrology (ESMA) of any planned change to the tested and approved product. With this notice, a description of the changes should be attached along with the technical data.

The Emirates Authority for Standardization and Metrology will then evaluate the measures to be taken in order for approval to remain in force after such changes are made. Assessment may result in additional tests

12. Factory Production Control

The manufacturer shall operate Factory Production Control procedures to ensure that products displaying the ESMA-symbol fulfil the requirements in this standard. These inspection procedures shall be described in a quality manual or corresponding document and shall fulfil the requirements set out in this section. If the manufacturer has an UAE.S ISO 9001 quality system that has been certified this can be regarded as fulfilling the requirements.

If the manufacturer hasn't an UAE.S ISO 9001 quality system certified, it should be fulfilling the requirements in the annex 4.

Annex 1 – Fire testing procedure

Fire suppression system approved as a component

1. Specifications

1.1. Fire suppression systems shall be tested for high fire load, low fire load, high fire load with fan and re-ignition.

1.2. The test apparatus, test fires and general test conditions are described in Appendix 1 to this annex.

1.3. High fire load

1.3.1. The high fire load test shall be conducted in accordance with Appendix 2 to this annex.

1.3.2. The test shall be conducted with the extinguishing agent and the propellant gas vessel or the suppression agent generator cooled to the minimum operating temperature for the fire suppression system, as declared by the manufacturer.

1.3.3. The fires shall be fully extinguished, either, in the minute after activation or upon end of the discharge of the suppression system.

1.3.4. The test is considered passed either after success at first attempt or at two of three attempts in a case when first of these attempts fails.

1.4. Low fire load

1.4.1. The low fire load test shall be conducted in accordance with Appendix 3 to this annex.

1.4.2. The fires shall be fully extinguished either in the minute after activation or upon end of the discharge of the suppression system.

1.4.3. The test is considered passed if success was achieved at the first attempt or at two of three attempts in a case when first of these attempts fails.

1.5. High fire load with fan

1.5.1. The high fire load test with fan shall be conducted in accordance with Appendix 4 to this annex.

1.5.2. The fires shall be fully extinguished either in the minute after activation or upon end of the discharge of the suppression system.

1.5.3. The test is considered passed if success was achieved at the first attempt or at two of three attempts in a case when first of these attempts fails.

1.6. Re-ignition test

1.6.1. The re-ignition test shall be conducted in accordance with Appendix 5 to this annex.

1.6.2. The fire shall be fully extinguished and no re-ignition shall occur 45 seconds after the extinguishing of the fire.

1.6.3. The test is considered passed either if success was achieved at the first attempt or at two of three attempts in a case when first of these attempts fails.

Annex 1 - Appendix 1

Test apparatus, test fires and general test specifications

1. Test apparatus

1.1. The test apparatus is to be made of steel plate. The thickness of the steel plate shall be in accordance with Table 1. Figure 1 shows the test apparatus from the front side, Figure 2 from the rear side and Figure 3 from above. The front side of the test apparatus simulates the rear side of a real engine compartment.

Figure 1
Coordinate system for the position of objects in test apparatus (view from front side)

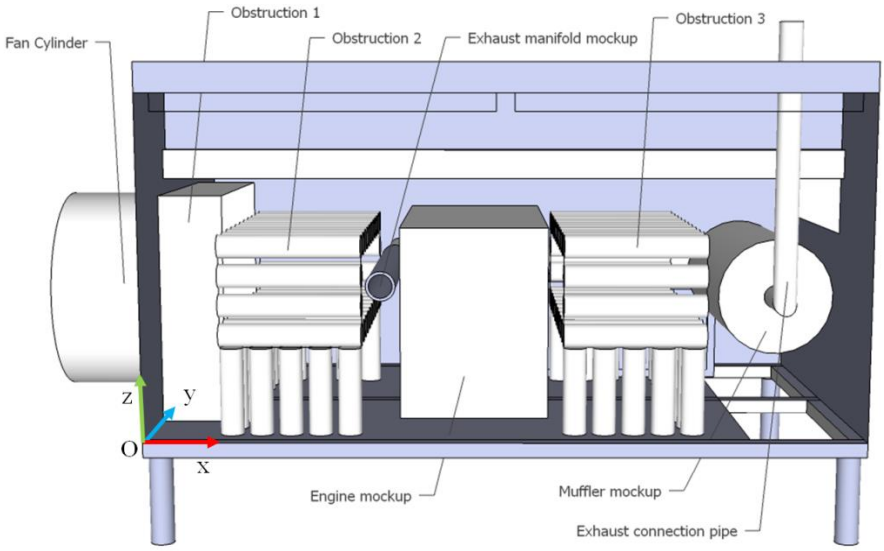

Figure 2
Test apparatus seen from the rear

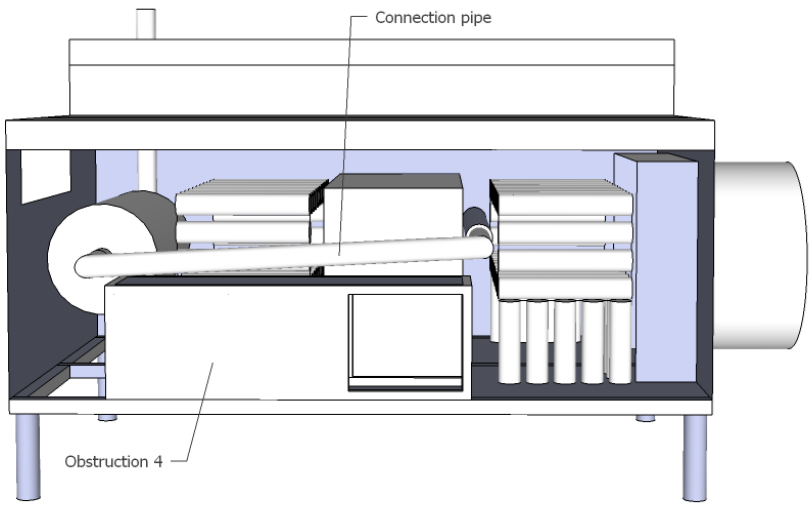

Figure 3
Test apparatus seen from above

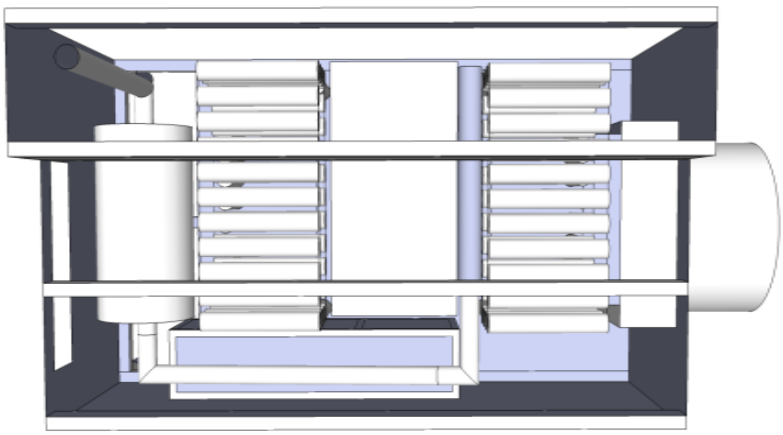

Table 1
Test apparatus objects

Objects	*Plate thickness*
Fan cylinder	1.5 – 2 mm
Obstructions	1.5 – 2 mm
Exhaust manifold mock-up	8 mm
Engine mock-up	2 – 3 mm
Muffler mock-up	2 – 3 mm
Exhaust pipe	2 – 3 mm
Connection pipe	2 – 3 mm
Walls, ceiling and floor	1.5 – 3 mm

1.2. Object locations

1.2.1. All objects in the test apparatus are positioned according to coordinates (x, y, z) as shown in Table 2. Origin is the position marked (O) in Figure 1. The value of the coordinates is the distance in metres from the origin (see Figure 1), i.e. left-front-bottom corner.

Table 2
Coordinates of objects

Objects	*Coordinates [x; y; z]*
Fan cylinder	[-0.60; 0.40; 0.10]
Obstruction 1	[0.0; 0.26; 0.0]
Obstruction 2	[0.26; 0.05; 0.02]
Exhaust manifold mock-up	[0.76; 0.05; 0.47]
Engine mock-up	[0.87; 0.05; 0.04]
Obstruction 3	[1.44; 0.05; 0.02]
Obstruction 4	[0.82; 1.2; 0.0]
Muffler mock-up	[2.0; 0.28; 0.23]

1.3. Framework

1.3.1. The framework of the test apparatus shall be constructed according to Figure 4. The sizes of the beams are 50 mm × 50 mm and 100 mm × 50 mm respectively. The framework shall be 300 mm above the ground.

Figure 4
Framework for the test apparatus

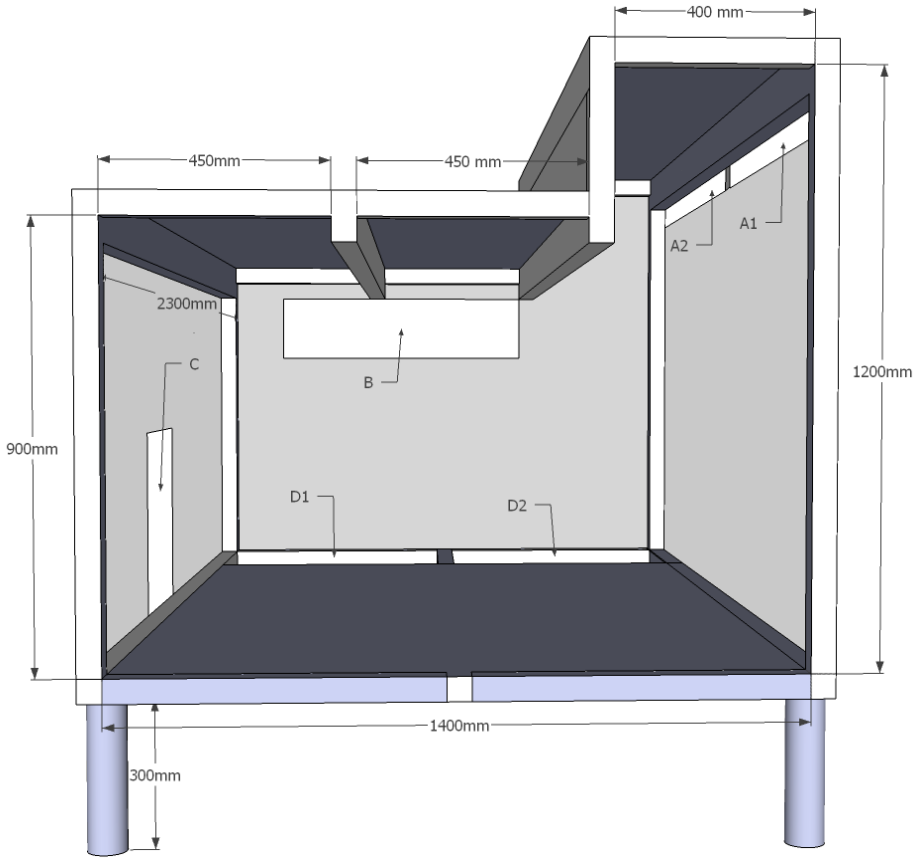

1.4. Apertures

1.4.1. In addition to the opening for the fan, the test apparatus includes six apertures. The dimensions and positions of the apertures are given according to the coordinates in Table 3. The positions are given by referring to two diagonally opposite corners (all apertures are rectangular in shape). The apertures are shown in Figure 4.

Table 3
Coordinates of apertures in the test apparatus

Aperture	*Coordinates [x; y; z] – [x; y; z]*	*Area of aperture*
A1	[0.03; 0.00; 1.08] – [1.18; 0.00; 1.13]	0.06 m^2
A2	[1.22; 0.00; 1.08] – [2.37; 0.00; 1.13]	0.06 m^2
B	[2.40; 0.50; 0.70] – [2.40; 1.30; 0.90]	0.16 m^2
C	[0.85; 1.50; 0.03] – [1.24; 1,50; 0.36]	0.13 m^2
D1	[2.00; 0.05; 0.00] – [2.35; 0.73; 0.00]	0.27 m^2
D2	[2.00; 0.78; 0.00] – [2.35; 1.20; 0.00]	0.26 m^2
	Total area of aperture:	0.94 m^2

1.5. Fan

1.5.1. An axial fan with a diameter of 710 mm shall be mounted on the left side of the fan cylinder. The diameter of the cylinder shall be equal to the diameter of the fan. The fan shall produce a certain rate of air flow through the cylinder according to the test scenarios in Appendices 2 to 5. A frequency converter may be used to adjust the fan speed.

1.6. Mock-up components

1.6.1. The dimensions of the engine mock-up are 1,000 mm × 650 mm × 500 mm. The dimensions of the muffler mock-up are diameter 400 mm × 800 mm. The exhaust manifold mock-up shall have the inner dimensions of diameter 80 mm × 900 mm. The mock-up components shall be hollowed. The exhaust manifold mock-up shall be connected to the muffler mock-up through a pipe with a diameter of 76 mm. A pipe from the muffler mock-up shall also be used to carry the exhaust gases from the pre-warming system out from the test apparatus.

1.7. Thermocouples

1.7.1. Seven thermocouples (Tc) shall be mounted on the exhaust manifold mock-up, drilled 2 mm into the tube from the outside. Thermocouples Tc1 to Tc4 shall be located on top of the mock-up at the distances from the mock-up inlet according to Table 4. Thermocouples Tc5 to Tc7 shall be located around the mock-up at the same distance from the inlet as Tc2. The location of the thermocouples is illustrated in Figures 5 and 6.

Table 4
Distance to thermocouple from inlet of exhaust manifold mock-up

Thermocouple	*Distance from inlet*
Tc1	250 mm
Tc2	300 mm
Tc3	350 mm
Tc4	600 mm
Tc5	300 mm
Tc6	300 mm
Tc7	300 mm

Figure 5
Thermocouples on the exhaust manifold mock-up

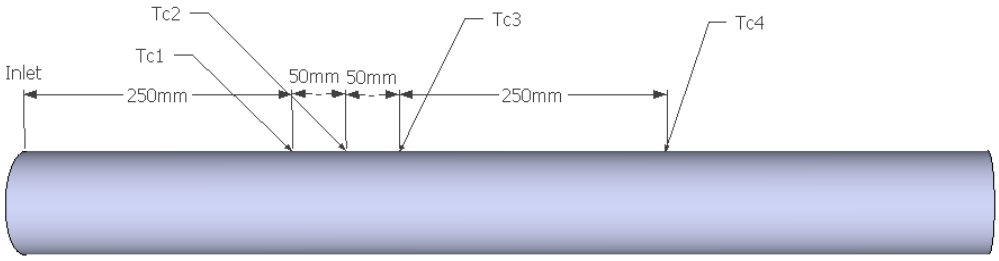

Figure 6
Thermocouples on the exhaust manifold mock-up (the inlet of the mock-up is on the left side)

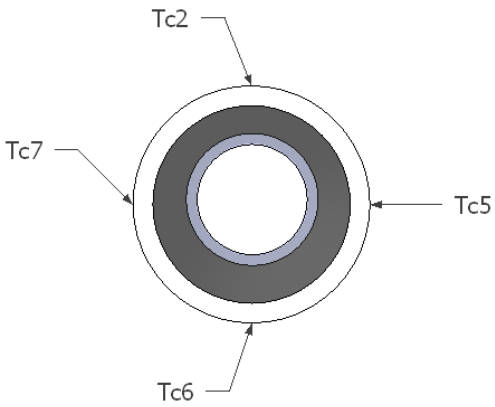

1.8. Propane burner

1.8.1. The propane burner used to pre-warm the exhaust system shall be chosen as to fulfil the requirements on achieved temperatures specified in paragraph 3.4.6.

1.9. Obstructions

1.9.1. Obstruction 1 has the dimensions of 900 mm × 840 mm × 230 mm, as shown in Figure 7. Obstructions 2 and 3 consist of horizontal and vertical obstruction tubes as shown in Figure 8. The horizontal obstruction tubes are closed and hollow, with a diameter of 80 mm and a length of 480 mm. The vertical tubes are hollow and open in the bottom, with a diameter of 80 mm and a length of 230 mm. The open distance between every tube is 20 mm. Obstruction 4 is a box measuring 1,250 mm × 300 mm × 390 mm as shown in Figure 9.

Figure 7
Obstruction 1

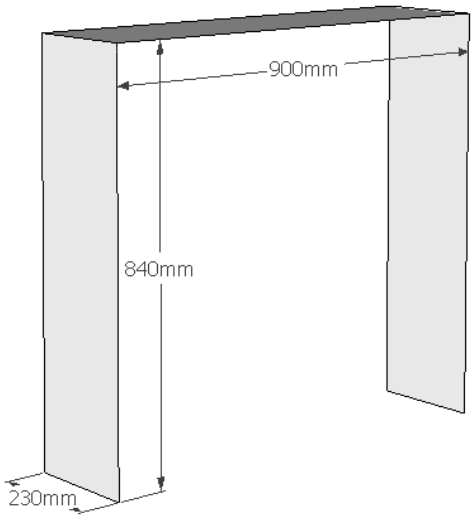

Figure 8
Obstruction 2 and 3

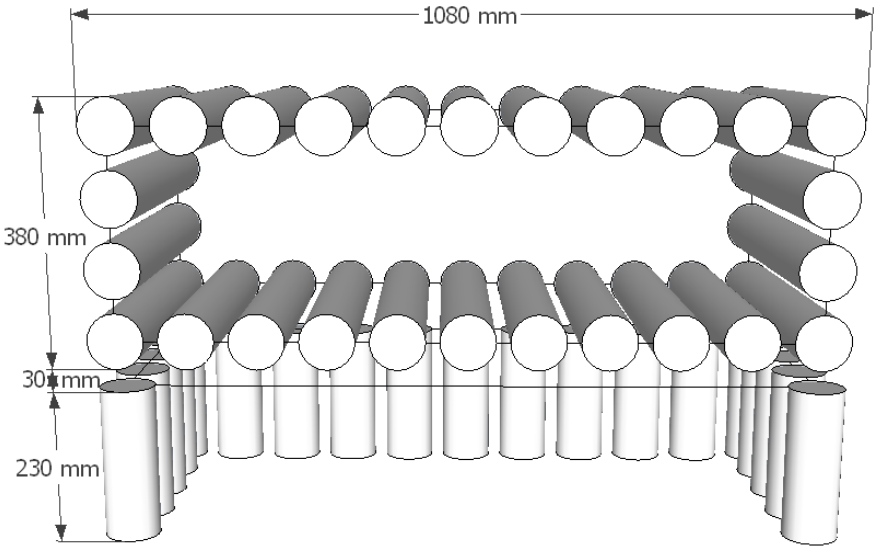

Figure 9
Obstruction 4

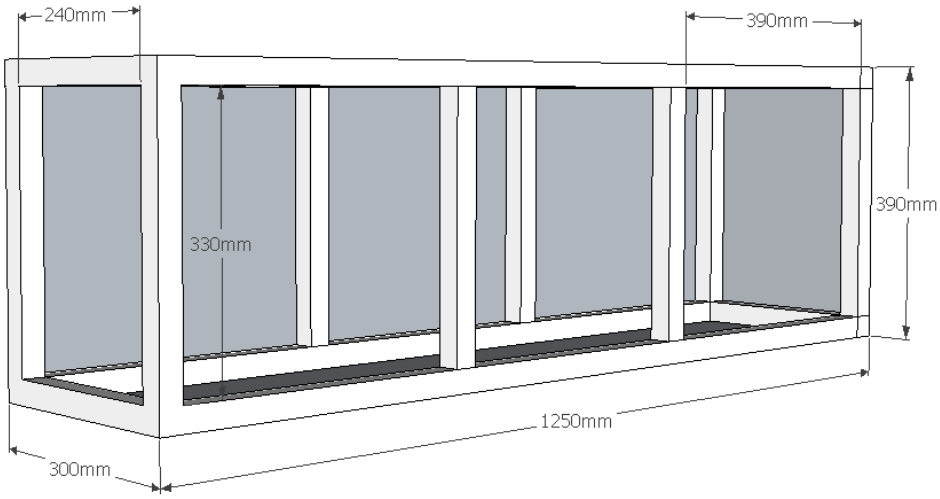

1.10. Pool fire trays

1.10.1. The square pool fire trays with fibreboards and the rectangular pool fire trays shall be positioned in its orientation according to the test scenarios in Appendices 2 to 4. Figure 10 shows the dimensions for test fire No. 2. The test fire shall be positioned perpendicular to the long edge of the test apparatus.

Figure 10
Distances for test fire No. 2

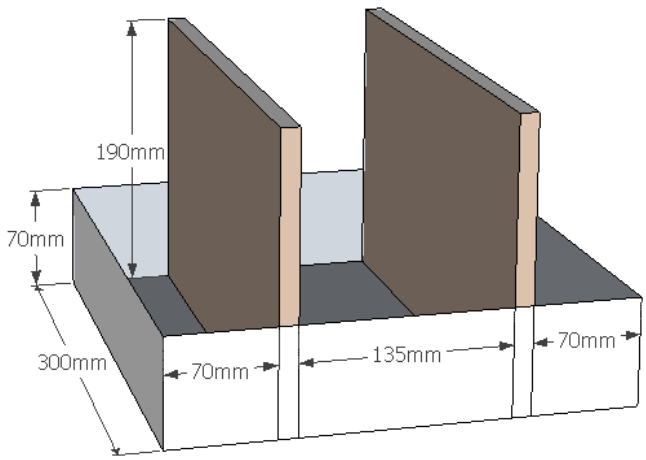

2. Test fires

2.1. The test fires in Table 5 are to be used in the different test scenarios described in Appendices 2 to 5. Diesel oil (commercial fuel oil or light diesel oil), heptane (C7H16) and engine oil 15W-40 with a flash point COC of 230 °C and viscosity at 40 °C of 107 mm²/s shall be used as test fuels.

Table 5
Test fires

Test fire No.	*Description*	*Fuel*	*Approximate peak heat release rate 60 sec after ignition*
1	Pool fire 300 mm × 300 mm	Diesel oil and heptane	60 kW
2	Pool fire 300 mm × 300 mm and 2 fibreboards	Diesel oil and heptane	110 kW
3	Pool fire 200 mm × 300 mm	Diesel oil and heptane	40 kW
4	Pool fire diameter 150 mm	Diesel oil and heptane	7 kW
5	Spray fire (450 kPa, 0.73 kg/min. ±10 per cent)	Diesel oil	520 kW
6	Spray fire (450 kPa, 0.19 kg/min ±10 per cent)	Diesel oil	140 kW
7	Dripping oil fire (40 droplets/min. ±10)	Engine oil	5 kW

2.2. Three different types of pool fire trays are applied in Table 5: square, rectangular and circular. Detailed descriptions of these trays are given in Table 6.

Table 6
Specification of pool fire trays

Dimensions	*Rim height*	*Nominal thickness*	*Used for test fire No.*
300 mm × 300 mm	70 mm	1.5 mm	1, 2
200 mm × 300 mm	70 mm	2 mm	3
Diameter 150 mm	100 mm	1.5 mm	4

2.3. The amount of water, diesel and heptane used in the tests shall be in accordance with Table 7.

Table 7
Amount of fuel used in pool fire trays

Dimensions	*Water*	*Diesel*	*Heptane*	*Used for test fire No.*
300 mm × 300 mm	1.0 l	0.5 l	0.2 l	1, 2,
200 mm × 300 mm	0.5 l	0.5 l	0.2 l	3
Diameter 150 mm	0.2 l	0.2 l	0.1 l	4

2.4. Test fire No. 2 consists of a heptane pool and two diesel soaked fibreboards with a dry density of 3.5 kg/m^3. The dimensions of the fibreboards shall be 12 mm × 295 mm × 190 mm. The fibreboards shall consist of at least 90 per cent raw material from wood. The moisture content in the boards before they are soaked in diesel oil shall not exceed 7 per cent. The fibreboards shall be completely immersed in diesel oil for at least 10 minutes prior to the test and mounted vertically in the pool fire tray not more than10 minutes before the start of the test.

2.5. Test fire Nos. 5 and 6 consist of diesel oil spray fires while Test fire No. 7 consists of a dripping oil fire (by hot surface ignition).

The spray nozzle for test fire No. 5 shall be a Lechler 460.368.30 or an equivalent. The spray nozzle for test fire No. 6 shall be a Lechler 212.245.11 or an equivalent. The spray nozzle for test fire No. 7 shall be a Danfoss 0.60X80H or an equivalent.

3. Installation of the fire suppression system

3.1. To obtain the minimum discharge rate condition, an extinguishing system is to be assembled using its maximum piping limitations with respect to the number of fittings and size and length of pipe, if relevant. The cylinder is to be used with its rated capacity and the cylinder or gas cartridge pressurized with propellant gas to the normal operating pressure, if relevant.

3.2. The fire suppression system shall be installed by the system manufacturer or supplier. Figure 11 shows the area where extinguishing agent discharge points such as of nozzles, extinguishing agent generators or extinguishing agent discharge tubes may be located. The discharge points shall be positioned inside the test apparatus, at two different areas:

(a) In the ceiling and at the rear wall. Discharge points positioned in the ceiling shall be positioned at a minimum of 750 mm above the floor level ($z \geq 0.75$) and outside of Obstruction 1. Nozzles positioned at the rear wall shall be positioned within 350 mm from the rear wall ($y \geq 1.15$) and minimum 450 mm from the floor level ($z \geq 0.45$). Figures 17 and 18 show the area where the nozzles may be located.

(b) Inside the small box (referred to as Obstruction 4) in the rear side of the test apparatus. Nozzles shall be located in the ceiling of the box with a minimum of 290 mm from the floor ($z \geq 0.29$).

Figure 11
Nozzle positioning seen from the rear side of test apparatus

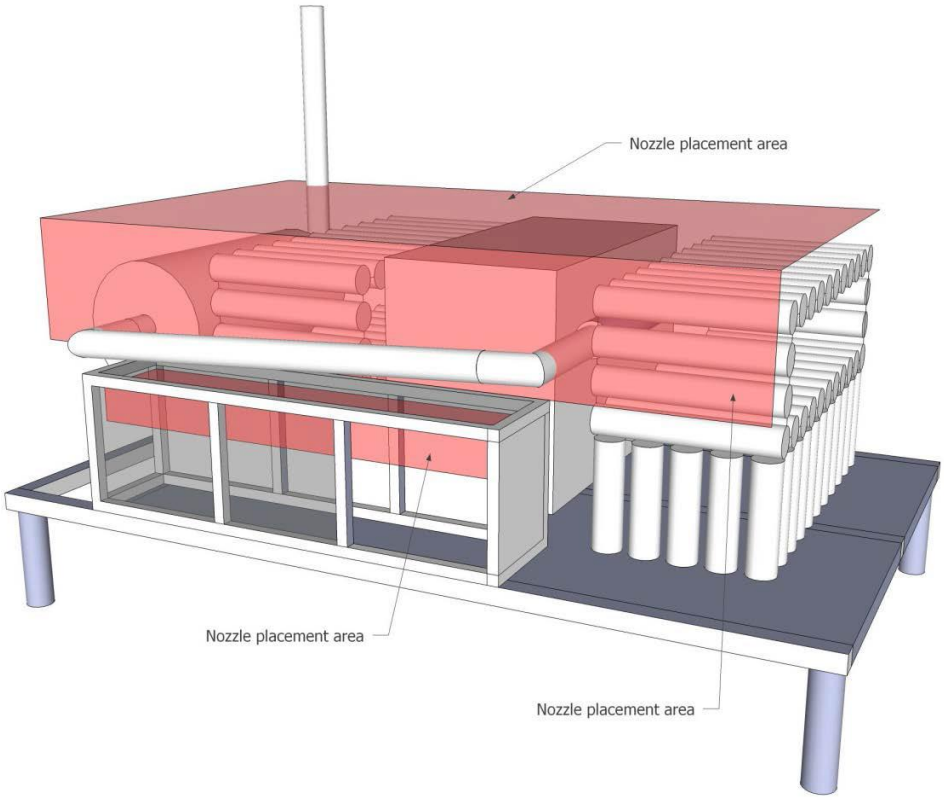

3.3. The system set-up and configuration shall be observed and documented prior to the test (e.g. amount of suppression agent and propellant gas, system pressure, number, type and location of discharge points, length of pipes and number of fittings).

Temperature shall be measured during the re-ignition tests at locations specified in Appendix 1.

3.4. Practical conduct of a test

3.4.1. The pool fire trays are to be filled with diesel and heptane on a base of water according to Table 7. If fibreboards are to be used as the fire source, the fibreboards shall be soaked in diesel oil, prior to the test, according to instructions in paragraph 2.4. above.

3.4.2. A pre-burn time based on the information in Appendices 2 to 5 is required. The pre-burn time is measured beginning from the time the first fire is ignited. All pool fires in the test scenarios shall be ignited within the allowed ignition-time, according to Appendices 2 to 5, using a suitable ignition source. The low fire load scenario in Appendix 3 may be performed either with one test fire at a time or the test fires combined with the suppression system showing its ability to extinguish all test fires, separately or merged.

3.4.3. A fan is used in some of the test scenarios to obtain a specific air flow rate into the test apparatus. The fan shall be engaged 30 seconds before the suppression system is activated. The fan shall remain active until the test is complete, i.e. until it is determined whether the test is passed or failed.

3.4.4. A diesel spray is used in some of the test scenarios. The diesel spray shall be activated 10 seconds prior to activation of the suppression system. The diesel spray shall remain active until the test is completed, i.e. until it is clarified if the test is passed or failed.

3.4.5. After the stipulated pre-burn time, the suppression system shall be manually or automatically activated.

3.4.6. In the test for re-ignition, the exhaust manifold mock-up tube is pre-heated prior to the test with a burner. Pressurized air may be added to the flame for better combustion. The tube shall be heated from the inner side until the temperature of Tc2 is above 600 °C and Tc1 is above 570 °C and the temperatures of Tc5, Tc6 and Tc7 not are less than 520 °C. When the predefined temperatures are reached the pre-heating procedure stops. After 30 seconds the engine oil shall start dripping and the suppression system activate 15 seconds later. The engine oil shall ignite before activation of the suppression system. The oil shall continue to drip on to the tube until it is clarified if the test is passed or failed.

4. Tolerances

4.1. A tolerance of ±5 per cent of the stipulated values shall apply (for time values: ±5 seconds).

Annex 2: Component testing

Component testing 1

Property	**Thermal cycling resistance**
Component	Representative sample of a suppression system
Applicable to type of system	All systems
Standard	UAE.S UAE.S ISO 16750-3:2007 Temperature cycling as stated by Figure 1 in UAE.S UAE.S ISO 16750-3:2007, 4.1.1 where T_{min} and T_{max} correspond to minimum and maximum operating temperatures[2] of the suppression system declared by the manufacturer.
Performance requirements	Following these tests, the representative sample shall be subjected to **Component Test 2**.

Component testing 2

Property	**Mechanical stress resistance**
Component	Representative sample of a suppression system
Applicable to type of system	All systems
Standard	UAE.S ISO 16750-3:2007 Vibration test with load and duration as specified in UAE.S ISO 16750-3:2007 (no temperature cycling), Test VII (*Sprung masses*, *commercial vehicles*). The test profile shall be extended as to include *additional profile in case of* $f_n < 30$ *Hz* which means that curve 2 shall be followed for $X < 45$ and curve 1 for $X > 45$ (Figure 11 in UAE.S ISO 16750-3:2007). Mechanical shock test in accordance with UAE.S ISO 16750 4.2.2.2, with 20 g as acceleration (*Commercial vehicles*, *devices on rigid points of the body or frame*). This test is to be performed on the same system as vibration test.
Performance requirements	Following these tests, the representative sample shall be discharged, show no visible signs of leaks or loosened fittings, and the mass of the extinguishing agent discharged shall not be less than 95 % of the highest mass discharged during the fire tests, based upon comparUAE.S ISOn of extinguishing agent vessel mass or sample mass before and after the test.

Component testing 3

Property	**Combined mechanical and thermal stress resistance**
Component	Representative sample of a suppression system
Applicable to type of system	Component Test 3 is **optional**. If performed, it replaces Component Test 1 and Component Test 2.
Standard	UAE.S ISO 16750-3:2007 Mechanical test with vibration load and duration as well as mechanical shocks as specified in **Component Test 2**, with simultaneous temperature cycling as stated in **Component Test 1**.
Performance requirements	Following these tests, the representative sample shall be discharged, show no visible signs of leaks or loosened fittings, and the mass of the extinguishing agent discharged shall not be less than 95 % of the highest mass discharged during the fire tests, based upon comparUAE.S ISOn of extinguishing agent vessel mass or sample mass before and after the test.

Component testing 4

Property	**Corrosion resistance**
Component	Representative sample of a suppression system
Applicable to type of system	All systems
Standard	Test method B in UAE.S ISO 21207, 3 weeks exposure
Performance requirements	Following this test, the representative sample shall be discharged, and the mass of the extinguishing agent discharged shall not be less than 95 % of the highest mass discharged during the fire tests, based upon comparUAE.S ISOn of extinguishing agent vessel mass or sample mass prior to and after the test.

Component testing 5

Property	**The extent of protection provided by an enclosure against ingress of solid foreign objects and water**
Component	Electrical and electronic equipment
Applicable to type of system	All systems
Standard	UAE.S IEC 60529:1989/A1:2009/COR3:2009 The equipment upon testing shall at least fulfill the degree of protection IP65.
Performance requirements	In accordance with the standard.

Annex 3 – Design manual

Approval impose that the manufacturer's system design manual as a minimum fulfills design parameters of the tested system. For an engine compartment with the same gross volume as the test apparatus (4 m^3) this means that the at least following variables must exactly match the tested system:

- Number of nozzles (or other discharge points used)
- Nozzle type used (if the tested system utilized more than one nozzle type, it is allowable to use them in different proportions as long as the total flow rate is assured to be the same)
- Mass of extinguishing agent (including safety margin)
- Extinguishing agent
- Mass of propellant gas
- Pressure of the propellant gas (at 20°C)
- Type of propellant gas
- Maximum pipe length from agent cylinder to the most remote nozzle.
- Dimensions of pipes and fittings (exact match)

The design manual should include a detailed description of the installation procedure and what engine parts are to be protected, for example: turbo charger, manifold, generator including electrical wiring, air conditioner, auxiliary heaters and pressurized oil and fuel lines and distribution piping.

The design manual shall also include:

- A technical description of the suppression system
- Placement of extinguishing agent and propellant gas containers
- Article number of all the included components
- The labeling and identification of high-pressure hoses, fitting and pressurized containers
- The pressure in containers and in the constituent systems
- Pressure test procedure for the piping upon completed installation if the operating pressure exceeds 30 bar
- The maximum and minimum storage and operating temperature
- A technical description of the detection system
- A schematic description showing the detection system, alarm and control unit and any shut-down devices (if applicable)

ANNEX 4 - Factory production control

The manufacturer shall operate FPC (Factory Production Control) procedures to ensure that products displaying the ESMA-symbol fulfil the requirements in this standard. These inspection procedures shall be described in a quality manual or corresponding document and shall fulfil the requirements set out in this section. If the manufacturer has an UAE.S ISO 9001 quality system that has been certified by an accredited third-party testing laboratory/certification body, as specified in Section 1, this can be regarded as fulfilling the following requirements in respect of organization, management review, document control, control of nonconforming products, corrective actions, handling of finished products and complaints.

1 Management review and internal auditing

The company management shall perform documented reviews of the company's inspection procedures at regular intervals in order to ensure the efficacy of the procedures.

2 Document control

Only the current editions of documents concerning manufacturer's inspection shall be available to the persons concerned in the company. There shall be a list of the documents, and a distribution list for them, together with procedures to produce new documents, alteration of existing documents and collection of documents that are no longer valid.

3 Design control

Design management procedures shall include an instruction that any design changes shall be notified to, and approved by, the accredited third-party testing laboratory/certification body before they can be introduced.

4 Testing and inspection

4.1 Reception inspection

Reception inspection (goods inward inspection) shall be performed to the extent regarded as necessary in order to verify that incoming materials and products accord with specified requirements. If materials or goods are imported, the manufacturer's documents that certify that the materials or goods supplied fulfil the requirements set out in Section 11.5.3. shall be inspected.

4.2 Manufacturing inspection

Manufacturing inspection shall be performed to the extent regarded as necessary in order to ensure that products that are manufactured fulfil specified requirements.

4.3 Inspection of finished products

Finished products shall be inspected to the extent regarded as necessary in order to ensure that they fulfil the specified requirements.

4.4 Equipment

Equipment shall be calibrated, inspected, adjusted and maintained as appropriate.

4.5 Installation control

If the manufacturer of the system is not the installer of the system, he shall at specified intervals perform spot checks on installed systems. Documents demonstrating the performed spot checks shall be available at follow-up inspections. See also section 11.3.

5 Control of nonconforming products

Products that do not fulfil specified requirements shall be separated from those that do. Such products may not be sold under the same name or number etc. as certified products.

6 Corrective actions

Any failures detected by manufacturer's FPC and/or by follow-up inspection/audit shall be investigated by the manufacturer, and appropriate steps shall be taken to correct the situation and prevent a repetition.

8 Handling of finished products

Damage and deterioration shall be prevented in connection with handling, storage, packing and delivery.

9 Traceability

It shall be possible to trace products that have been supplied back to the relevant production and material batch. Which components that shall be traceable and to which extent will for each certified suppression system be specified by the accredited third-party testing laboratory/certification body.

10 Marking

Products shall be marked (see section 10) when manufacturer's inspection has shown that the requirements are fulfilled.

11 Complaints

Complaints from customers or others in respect of certified products, marking, marketing etc., shall be documented together with details of the action taken with the documentation being kept available for inspection by the accredited third-party testing laboratory/certification body.

12 Quality documents – keeping of records

The manufacturer shall be able to confirm, by means of collecting and retaining relevant documents, that the products fulfil specified requirements.

Documentation of inspection and testing shall be of such an extent that the necessary traceability can be assured. Records shall contain comments when results depart from those expected, together with descriptions of actions taken in response thereof.

Archiving times shall be stated for documents relating to manufacturer's FPC.

Test and inspection records shall be kept available for inspection by the accredited third-party testing laboratory/certification body and shall be retained for at least ten years.