EUROPEAN
COMMISSION

Brussels, XXX
[…](2020) XXX draft

ANNEXES 1 to 8

ANNEXES

to the

Commission Implementing Regulation (EU) .../...

laying down rules for the application of Regulation (EU) 2019/2144 of the European Parliament and of the Council as regards uniform procedures and technical specifications for the type-approval of vehicles, and of systems, components and separate technical units intended for such vehicles, as regards their general construction characteristics and safety

ANNEX I

TYPE-APPROVAL IN AREAS COVERED BY UN REGULATIONS

PART 1

Information document

MODEL

Information document No ... relating to the EU type-approval of a vehicle with regard to a *system* / *component* / *separate technical unit* ([1]) with regard to UN Regulation No …, as amended by [supplement … to ([1])] the … series, concerning … based on and formatted in accordance with the item numbering of Annex I to Commission Implementing Regulation (EU) 2020/683([2])

The following information, where applicable, shall be supplied in triplicate and include a list of contents. Any drawings or pictures shall be supplied in appropriate scale and in sufficient detail on size A4 or on a folder of A4 format. Photographs, if any, shall show sufficient detail.

0. GENERAL

0.1. Make (trade name of manufacturer):

0.2. Type:

0.2.1. Commercial name(s) (if available):

0.3. Means of identification of type, if marked on the *vehicle* / *component* / *separate technical unit* ([1]) ([3]):

0.3.1. Location of that marking:

0.4. Category of vehicle ([4]):

0.5. Company name and address of manufacturer:

0.8. Name(s) and address(es) of assembly plant(s):

0.9. Name and address of the manufacturer's representative (if any):

1. GENERAL CONSTRUCTION CHARACTERISTICS OF THE VEHICLE

1.1. Photographs, pictures and/or drawings of a representative vehicle/component/separate technical unit([1]):

All subsequent items and information relevant for the vehicle, component or separate technical unit shall be provided in agreement with the technical service and type-approval authority responsible for granting the EU type-approval for which the application was submitted. It may be based on a model for an information document if provided by UN Regulation No …, otherwise it shall insofar practicable be based on the item numbering of Annex I to Commission Implementing Regulation (EU) 2020/683 (i.e. the complete list of information for the purpose of EU type-approval of vehicles, components and separate

technical units) and any additional information or particulars required for approval under UN Regulation No … shall be included.

Explanatory notes

Information document numbering in accordance with the template laid down in Annex I to Regulation (EU) 2018/858

([1]) Delete where not applicable.

([2]) If a part (e.g. component or separate technical unit) has been type-approved, that part need not be described if reference is made to such approval. Similarly, a part need not be described if its construction is clearly apparent from the attached diagrams or drawings. For each item for which drawings, pictures or photographs shall be attached, give numbers of the corresponding attached documents.

([3]) If the means of identification of type contains characters not relevant to describe the vehicle, component or separate technical unit types covered by this information document, such characters shall be represented in the documentation by the symbol "?" (e.g. ABC??123??).

([4]) Classified according to the definitions set out in Part A of Annex I to Regulation (EU) 2018/858.

PART 2

MODEL

Format: A4 (210 × 297 mm)

TYPE-APPROVAL CERTIFICATE

Identification of type-approval authority

Communication concerning *granting* / *extension* / *refusal* / *withdrawal* ([1]) of type-approval of a type of *vehicle with regard to a system* / *component* / *separate technical unit* ([1]) complying with the requirements laid down in UN Regulation No … as amended by *supplement … to* ([1]) the … series, with regard to Regulation (EU) 2019/2144, as last amended by Regulation (EU) No …/…

Number of the EU type-approval certificate: . . . . . .

Reason for *extension* / *refusal* / *withdrawal* ([1]): . . . . . .

SECTION I

0.	GENERAL
0.1.	Make (trade name of manufacturer):
0.2.	Type:
0.2.1.	Commercial name(s) (if available):
0.3.	Means of identification of type, if marked on the *vehicle* / *component* / *separate technical unit* ([1]):
0.3.1.	Location of that marking:
0.4.	Category of vehicle ([2]):
0.5.	Name and address of manufacturer:
0.8.	Name(s) and address(es) of assembly plant(s):
0.9.	Name and address of the manufacturer's representative (if any):
1.	GENERAL CONSTRUCTION CHARACTERISTICS OF THE VEHICLE
1.1.	Photographs and/or drawings of a representative vehicle:

SECTION II

1. Additional information (where applicable): see Addendum.

2. Technical service responsible for carrying out the tests:

3. Date of test report:

4. Number of test report:

5. Remarks (if any): see Addendum.

6. Place:

7. Date:

8. Signature:

([1]) Delete where not applicable.

([2]) Classified according to the definitions set out in Part A of Annex I to Regulation (EU) 2018/858.

Attachments: - Information package

- Test report

- Completed communication form conforming to the relevant model in the applicable UN Regulation, albeit without the mentioning of an UN approval being granted or extended as well as without the mentioning of an UN type-approval number

Addendum

to type-approval certificate number …

1. Based on UN Regulation using EU type-approved components or separate technical units: *yes* / *no* ([1])

2. Approval procedure according to Article 30(7) of Regulation EU 2018/858 (virtual testing): *yes* / *no* ([1])

3. Approval procedure according to Article 39 of Regulation EU 2018/858 (new technologies or new concepts): *yes* / *no* ([1])

4. Approval procedure according to Article 72(1) and Annex VII of Regulation EU 2018/858 (in-house technical service): *yes* / *no* ([1])

5. In case of components and separate technical units, example of the type-approval marking on the component or separate technical unit:

6. Remarks:

ANNEX II

STATUTORY PLATE AND THE VEHICLE IDENTIFICATION NUMBER

PART 1

Information document for EU type-approval of motor vehicles and their trailers with regard to the statutory plate and the vehicle identification number (VIN)

MODEL

Information document No … relating to the EU type-approval of a vehicle with regard to the vehicle statutory plate and the vehicle identification number.

The following information shall be supplied in triplicate and include a list of contents. Any drawings or pictures shall be supplied in appropriate scale and in sufficient detail on size A4 or on a folder of A4 format. Photographs, if any, shall show sufficient detail.

0.1.

0.2.

0.2.1.

0.3.

0.3.1.

0.4.

0.5.

0.6.

0.6.1.

0.6.2.

0.8.

0.9.

1.

1.1.

9.

9.17.

9.17.1.

9.17.2.

9.17.3.

9.17.4.

9.17.4.1.

9.17.4.2.

9.17.4.3.

Explanatory notes

Information document numbering in accordance with the template laid down in Annex I to Commission Implementing Regulation (EU) 2020/683.

PART 2

Section A

Technical requirements

1. Manufacturer's statutory plate

1.1. General provisions

1.1.1. Each vehicle shall be fitted with the manufacturer's statutory plate described in this section

1.1.2. The manufacturer's statutory plate shall be affixed by the vehicle manufacturer or the vehicle manufacturer’s representative.

1.1.3. The manufacturer's statutory plate shall consist of either of the following:

(a) a rectangular sheet of metal

(b) a rectangular self-adhesive label

1.1.4. Metallic plates shall be fastened with rivets or equivalent.

1.1.5. Labels shall be tamper evident, fraud resistant and self-destructive in case there is an attempt to remove the label.

1.2. Information to be mentioned on the manufacturer's statutory plate.

1.2.1. The following information shall be printed indelibly on the manufacturer's statutory plate in the order listed:

(a) the manufacturer's company name;

(b) the whole vehicle type-approval number;

(c) the stage of completion, in the case of multi-stage built vehicles;

(d) the vehicle identification number;

(e) the technically permissible maximum laden mass;

(f) the technically permissible maximum mass of the combination;

(g) the technically permissible maximum mass on each axle listed in order from front to rear.

1.2.2. The height of the characters referred to in point 1.2.1.(d) shall not be less than 4 mm.

1.2.3. The height of the characters of the information referred to in point 1.2.1, other than the vehicle identification number, shall not be less than 2 mm.

1.3. Specific provisions

1.3.1. Trailers

1.3.1.1. In the case of a trailer, the technically permissible maximum static vertical mass on the

coupling point shall be mentioned.

1.3.1.2. The coupling point shall be deemed the first axle and be numbered '0'.

1.3.1.3. The first axle shall be numbered '1', the second '2' and so on, separated by a hyphen.

1.3.1.4. The mass of the combination referred to in point 1.2.1.(f) shall be omitted.

1.3.2. Heavy duty vehicles

1.3.2.1. With regard to vehicles of category N_3, O_3 or O_4, the technically permissible maximum mass on an axle group shall be mentioned. The entry corresponding to "Axle group" shall be identified by the letter 'T', followed by a hyphen.

1.3.2.2. With respect to vehicles of category M_3, N_3, O_3 or O_4, the manufacturer may mention on the manufacturer's statutory plate the intended registration/in-service maximum permissible laden mass.

1.3.2.2.1. The part of the manufacturer's statutory plate where the masses are mentioned shall be subdivided in two columns: the intended registration/in-service maximum permissible masses shall be mentioned in the left column and the technically permissible maximum laden masses in the right column.

1.3.2.2.2. The two-letter code of the country where the vehicle is intended to be registered shall be indicated as header of the left column. The code shall be in accordance with Standard ISO 3166-1:2006.

1.3.2.3. The requirements of point 1.3.2.1 shall not apply where:

(a) the technically permissible maximum mass on an axle group is the sum of the technically permissible maximum mass on the axles which are part of that axle group;

(b) the letter "T" is added as suffix to the maximum mass on each axle which is part of that axle group; and

(c) where the requirements of point 1.3.2.2 are applied, the registration/in-service maximum permissible mass on the group of axles is the sum of the registration/in-service maximum permissible mass on the axles which are part of that axle group.

1.4. Additional information

1.4.1. The manufacturer may provide additional information below or alongside the prescribed inscriptions, outside a clearly marked rectangle which shall enclose only the information referred to in points 1.2. and 1.3.

1.5. Models of the manufacturer's statutory plate

1.5.1. Examples of the various possible models of the manufacturer's statutory plate are given in Section B.

1.5.2. The data given on the models are fictitious.

1.6. Requirements for location on vehicle

1.6.1. The manufacturer's statutory plate shall be firmly attached in a conspicuous and readily accessible position.

1.6.2. The location shall be chosen so that the part on which it is affixed is not subject to replacement in use.

2. Vehicle identification number (VIN)

2.2.1. The VIN shall consist of the following three sections and a check digit:

(a) the world manufacturer identifier (WMI);

(b) the vehicle descriptor section (VDS);

(c) the vehicle indicator section (VIS).

2.2.2. The WMI shall consist of a code assigned to the vehicle manufacturer which enables that manufacturer to be identified.

2.2.2.1. The code shall comprise three alphanumeric characters, capital roman letters or Arabic numerals, which shall be assigned by the competent authority in the country where the principal place of business of the manufacturer is situated.

2.2.2.2. The competent authority shall act in accordance with the international organisation referred to in Standard ISO 3780:2009 on "Road vehicles – World manufacturer identifier (WMI) code".

2.2.2.3. Where the manufacturer's global production is less than 500 vehicles per year, the third character shall always be '9'. In order to identify such manufacturers, the competent authority referred to in point 2.2.2. shall assign the third, the fourth and the fifth character of the VIS.

2.2.3. The VDS shall consist of five alphanumeric characters, capital roman letters or Arabic numerals, which shall serve to indicate the general characteristics of the vehicle. Where the manufacturer does not use one or more of the five characters, the unused spaces shall be filled in with alphanumeric characters at the manufacturer's discretion so that the total number of characters is five.

2.2.4. The ninth position of the VIN shall be a check digit that is mathematically correct in accordance with the formula specified in Section C.

2.2.5. The VIS shall consist of eight alphanumeric characters, capital Roman letters or Arabic numerals, of which the last four shall consist of digits only.

The VIS shall provide, in conjunction with the WMI and the VDS, clear identification of a particular vehicle. Any unused space shall be filled in with the digit '0' so that the total number of characters is eight.

2.2.6. The height of the characters of the VIN marked on the chassis shall be no less than 7 mm.

2.2.7. There shall be no space between the characters.

2.2.8. The use of the letters 'I', 'O' or 'Q' shall not be permitted.

2.2.9. The beginning and the end of the VIN shall be limited by one symbol at the choice of the

manufacturer. That symbol should neither be a Roman capital letter nor an Arabic numeral.

2.2.9.1. The requirement under point 2.2.9. may be waived where the VIN is marked on a single line.

2.2.9.2. Where the VIN is marked on two lines, the requirement under point 2.2.9. shall apply to each line.

2.3. Requirements for location of the VIN on a vehicle

2.3.1. The VIN shall be marked on a single line.

2.3.1.1. Where, for technical reasons such as lack of space, the VIN cannot be marked on a single line, the national authority may, at the request of the manufacturer, allow the VIN to be marked on two lines. In such case, the sections referred to in point 2.2.1. may not be interrupted.

2.3.2. The VIN shall be marked by stamping or mechanical hammering on the chassis, frame or other similar structure.

2.3.3. Techniques that are proven to offer the same level of inalterability against tampering or forgery as mechanical hammering may be used instead of that technique.

2.3.4. The VIN shall be marked in a clearly visible and easily accessible location, in a way that the marking cannot be obliterated or deteriorate.

2.3.5. The VIN shall be located on the right-hand side of the vehicle.

Section B

Model of statutory plate

1. MODEL A

for vehicles of category M_1 and N_1

JERMY CLARKFILS AUTOMOBILES S.A.
e2*2018/858*11460
VRZUA5FX29J276031
1 850 kg
3 290 kg
1 - 1 100 kg
2 - 880 kg

Example of a manufacturer's statutory plate for a vehicle of category M_1 type-approved in France.

2. MODEL B

for vehicles of category M_2, M_3, N_2 and N_3

DEMURO VEICOLI COMMERCIALI S.P.A. e3*2018/858*52288 ZCFC35A3405850414	
(IT) 17 990 kg 40 000 kg 1 - 7 100 kg 2 - 11 500 kg T - kg	17 990 kg 44 000 kg 1 - 7 100 kg 2 - 11 500 kg T - kg

Example of a manufacturer's statutory plate for a vehicle of category N_3 type-approved in Italy.

Note: the column on the left side is optional

3. MODEL C

for vehicles of category O_1 and O_2

KAPITÅN SLØW e5*2018/858*11460 YSXFB56VX71134031 1 500 kg 0 - 100 kg 1 - 1 100 kg 2 - 880 kg

Example of a manufacturer's statutory plate for a vehicle of category O_2 type-approved in Sweden.

4. MODEL D

for vehicles of category O_3 and O_4

Jalo Pnik CO. TD e8*2018/858*10036 2T0YX646XX7472266	
(CZ) 34.000 kg 0 - 8.000 kg 1 - 9.000 kg	37.000 kg 0 - 8.000 kg 1 - 10.000 kg

2 - 9.000 kg	2 - 10.000 kg
3 - 9.000 kg	3 - 10.000 kg
T - 27.000 kg	T - 30.000 kg

Example of a manufacturer's statutory plate for a vehicle of category O_4 type-approved in Czech Republic.

Note: the column on the left side is optional

5. MODEL E

additional plate for vehicles built in multiple stages (in accordance with point 4.2. of Annex IX to Regulation (EU) 2018/858)

HaMsTeR conversions LLP
e49*2018/858*01912
Stage 3
VRZUA5FX29J276031
1 900 kg
kg
1 - 1 200 kg
2 - kg

Example of a manufacturer's statutory plate for a multi-stage vehicle of category N_1 type-approved in Cyprus. The technically permissible mass is mentioned on this plate, meaning that it has been changed in the current stage of approval. The technically permissible maximum mass of the combination is not mentioned on this plate, meaning that it has not been changed in the current stage of approval. In addition, the entry ‘0’ is not mentioned meaning that the vehicle is permitted to tow a trailer. The technically permissible maximum mass on the first axle is mentioned on this plate, meaning that it has been changed in the current stage of approval. The technically permissible maximum mass on the second axle is not mentioned on this plate, meaning that it has not been changed in the current stage of approval.

Section C
Check digit

1. The check digit shall be calculated by carrying out the mathematical computation specified in points 1.1. to 1.4.

1.1. Assign to each number in the VIN its actual mathematical value and assign to each letter the value specified below:

A = 1	J = 1	S = 2
B = 2	K = 2	T = 3
C = 3	L = 3	U = 4
D = 4	M = 4	V = 5
E = 5	N = 5	W = 6
F = 6	P = 7	X = 7
G = 7	R = 9	Y = 8
H = 8		Z = 9

1.2. Multiply the assigned value for each character in the VIN by the position weight factor specified below:

1st = 8	10th = 9
2nd = 7	11th = 8
3rd = 6	12th = 7
4th = 5	13th = 6
5th = 4	14th = 5
6th = 3	15th = 4
7th = 2	16th = 3
8th = 10	17th = 2
9th = check digit	

1.3. Add the resulting products and divide the total by 11.

1.4. The check digit (number 0 to 9 or letter X) is based on either the fractional remainder or the decimal equivalent remainder (rounded to the nearest thousandth) as listed in the table below.

Check digit	Fractional remainder	Decimal equivalent remainder
0	0	0
1	1/11	0.091
2	2/11	0.182
3	3/11	0.273
4	4/11	0.364
5	5/11	0.455
6	6/11	0.545
7	7/11	0.634
8	8/11	0.727
9	9/11	0.818
X	10/11	0.909

PART 3

EU TYPE-APPROVAL CERTIFICATE (VEHICLE SYSTEM)

Communication concerning *granting* / *extension* / *refusal* / *withdrawal* ([1]) of type-approval of a type of vehicle with regard to the statutory markings, in accordance with the requirements laid down in Annex II to Regulation (EU) 2020/… [*Please insert reference to this Regulation*], as last amended by Regulation (EU) No …/…

Number of the EU type-approval certificate:

Reason for *extension* / *refusal* / *withdrawal* ([1]):

SECTION I
[…]
SECTION II
[…]
Addendum
to EU type-approval certificate number …

1. Additional information:

1.1. Brief description of the vehicle type as regards its structure, dimensions, lines and constituent materials:

2. Location of the vehicle identification number:

3. Location of the statutory plate:

4. Statutory plate for vehicle built in multi-stage: *yes* / *no* ([1])

5. Remarks:

([1]) Delete where not applicable.

ANNEX III

SPACE FOR MOUNTING AND FIXING OF FRONT AND REAR REGISTRATION PLATES

PART 1

Information document for EU type-approval of motor vehicles and their trailers with regard to the space for mounting and fixing of front and rear registration plates

MODEL

Information document No … relating to the EU type-approval of a motor vehicle or a trailer with regard to the space for mounting and the fixing of front and rear registration plates.

The following information shall be supplied in triplicate and include a list of contents. Any drawings or pictures shall be supplied in appropriate scale and in sufficient detail on size A4 or on a folder of A4 format. Photographs, if any, shall show sufficient detail.

0.

0.1.

0.2.

0.2.1.

0.3.

0.3.1.

0.4.

0.5.

0.8.

0.9.

1.

1.1.

2.

2.4.

2.4.2.

2.4.2.3.

2.6.

9.

9.14.

9.14.1.

9.14.2.

9.14.3.

9.14.4.

9.14.5.

9.14.5.1.

9.14.5.2.

9.14.5.3.

9.14.5.4.

9.14.6.

9.14.7.

Explanatory notes

Information document numbering in accordance with the template laid down in Annex I to Commission Implementing Regulation (EU) 2020/683.

PART 2

Technical requirements and test procedure

1. For the purposes of this Annex, the following definitions shall apply:

1.1. *'virtually flat surface'* means a surface of solid material, which may also consist of patterned mesh or grille, with a radius of curvature of at least 3 000 mm;

1.2. *'surface of patterned mesh'* means a surface consisting of an evenly spread pattern of shapes such as round, oval, diamond, rectangular or square holes spread evenly at intervals not exceeding 15 mm;

1.3. *'surface of grille'* means a surface consisting of parallel bars which are spread evenly and have a mutual distance of not exceeding 15 mm;

1.4. *'nominal surface'* means the theoretical geometrically perfect surface without taking into account surface irregularities such as protrusions or indentations;

1.5. *'longitudinal median plane of the vehicle'* means the plane of symmetry of the vehicle or, if the vehicle is not symmetrical, the vertical longitudinal plane passing through the middle of the vehicle axles;

1.6. *'inclination'* means the degree of the angular deviation in relation to a vertical plane.

2. Technical requirements

2.1. Vehicles shall be equipped with a space for mounting and fixing of rear registration plates.

2.1.1. Motor vehicles of categories M and N shall in addition be equipped with a space for mounting and fixing of front registration plates.

2.1.2. Vehicles of category O_2, O_3 and O_4 shall be equipped with two separate spaces for mounting and fixing of rear registration plates (i.e. allowing for the optional identification of a towing vehicle where required by a national authority).

2.2. Shape and dimensions of the space for mounting a registration plate

2.2.1. The designated space for mounting shall comprise a rectangular area with the following minimum dimensions:

either ('wide plate')

width: 520 mm

height: 120 mm

or ('tall plate')

width: 340 mm

height: 240 mm.

2.3. Mounting and fixing of front and rear registration plates.

2.3.1. The space for mounting a front or rear registration plate shall comprise a flat or virtually flat rectangular surface.

2.3.1.1. An adapter plate may form the basis of the space for mounting a registration plate when provided as standard equipment.

2.3.1.2. The vehicle manufacturer may provide optional or alternative registration plate spaces on the vehicle.

2.3.2. The surface to be covered by a front or rear registration plate may have holes or gaps; however those holes or gaps shall be no more than 40 mm wide without taking into account their length (i.e. a gap or slot shall never be wider than 40 mm, but may be longer than 40 mm).

2.3.3. The surface to be covered by a front or rear registration plate may have protrusions, provided that those protrusions do not project more than 5.0 mm from the nominal surface. Patches of very soft materials, such as foam or felt to stop the registration plate vibrating, shall not be taken into account.

2.3.4. The space for mounting a front or rear registration plate shall be such that, with a test plate, as defined in point 3.4., being fixed in accordance with the manufacturer's instructions, the plate shall have the following characteristics:

2.3.4.1. Location of the space for mounting a front or rear registration plate:

2.3.4.1.1. The space for mounting a registration plate at the front of the vehicle shall be such that the plate can be positioned entirely within the two parallel longitudinal vertical planes passing through the outer extremities of the vehicle, not taking into account any devices for indirect vision. The designated space itself shall not form the widest point of the vehicle.

2.3.4.1.2. The space for mounting a registration plate at the rear of the vehicle shall be such that the plate can be positioned entirely within the two parallel longitudinal vertical planes passing through the outer extremities of the vehicle, not taking into account any devices for indirect vision. The designated space itself shall not form the widest point of the vehicle.

2.3.4.1.3. Front and rear registration plates shall be perpendicular (± 5°) to the longitudinal median plane of the vehicle, measured anywhere on the plate.

2.3.4.2. Position of the front and rear plate in relation to the vertical transverse plane:

2.3.4.2.1. The plate may be inclined to the vertical at not less than -5° and not more than 30°, provided that the height of the upper edge of the plate is not more than 1 500 mm from the ground surface.

2.3.4.2.2. The plate may be inclined to the vertical at not less than -15° and not more than 5°, provided that the height of the upper edge of the plate is more than 1 500 mm from the ground surface.

2.3.4.3. Height of the front and rear plate from the ground surface:

2.3.4.3.1. The lower edge of the plate shall not be less than 200 mm from the ground surface.

2.3.4.3.2. The height of the upper edge of the plate from the ground surface shall not exceed 1 500 mm.

2.3.4.3.2.1. For special purpose vehicles, where it is not practicable to comply with the height provision for the registration plate space due to the construction of the vehicle, the maximum height may, by way of derogation from point 2.3.4.3.2., exceed 1 500 mm provided that it is as close to that limit as the constructional characteristics of the vehicle allow.

2.3.4.4. Geometrical visibility:

2.3.4.4.1. Front and rear plates shall be visible in the whole space within the following four planes:

(a) the two vertical planes touching the two lateral edges of the plate and forming an angle measured outwards to the left and to the right of the plate of 30° to the longitudinal median plane of the vehicle;

(b) the plane touching the upper edge of the plate and forming an angle measured upwards of 15° to the horizontal;

(c) the horizontal plane through the lower edge of the plate, in case the height of the upper edge of the plate from the ground surface does not exceed 1 500 mm;

(d) the plane touching the lower edge of the plate and forming an angle measured downwards of 15° with the horizontal, in case the height of the upper edge of the plate from the ground surface exceeds 1 500 mm.

The front plate shall be visible towards the front of the vehicle and the rear plate shall be visible towards the rear of the vehicle.

2.3.4.4.2. No structural element, even when fully transparent, shall be located within the space described above.

2.3.4.5. The gap between the edges of a mounted and fixed registration plate and the actual surface of the plate space shall not exceed 5.0 mm along the complete outline of the plate.

2.3.4.5.1. This gap may be exceeded if measured at a hole or gap in the surface of patterned mesh or between the parallel bars in the surface of a grille.

2.3.5. The actual position and shape of the mounted and fixed test plate as determined above, in particular its resulting radius of curvature, shall be taken into account for the purpose of rear registration plate lighting device requirements.

2.4. Other requirements

2.4.1. The presence of a registration plate shall not form the basis or part of the basis for attaching, mounting or clipping any other vehicle part, component or device onto it (e.g. lighting device supports may not be fixed onto a registration plate).

2.4.2. No vehicle part, adaptor plate, component or device shall become loosened or detached as a result of removal of a registration plate.

2.4.3. When a registration plate is fixed, its visibility shall not be reduced under normal conditions of use due, in particular, to vibrations and dynamic forces such as driving wind forces.

2.4.4. It is not permitted to provide a registration plate mounting location which can easily pivot up and/or down beyond the angles laid down in points 2.3.4.2.1. and 2.3.4.2.2. in relation to the vehicle structure in normal driving conditions (i.e. with doors or access panels closed).

2.4.5. Where it is declared by the vehicle manufacturer that a motor vehicle is suitable for towing loads (point 2.11.5 of the information document referred to in Article 24(1) of Regulation (EU) 2018/858) and any part of a suitable mechanical coupling device, whether fitted or not to the type of motor vehicle, could (partly) obscure the space for mounting and fixing the rear registration plate, the following shall apply:

(a) the motor-vehicle's user instructions (e.g. owner's manual, vehicle handbook) shall clearly specify that installation of a mechanical coupling device that cannot be easily removed or repositioned is not permitted,

(b) the instructions shall also clearly specify that, when fitted, a mechanical coupling device must always be removed or repositioned when it is not in use; and

(c) in the case of vehicle system type-approval in accordance with UN Regulation No 55, it shall be ensured that the removal, repositioning and/or alternate location provisions are also fully complied with as regards lighting installation and space for mounting and fixing the rear registration plate.

3. Test procedure

3.1. Determination of the vertical inclination and height of the registration test plate from the ground surface.

3.1.1. The vehicle shall be placed on a smooth horizontal surface. The steered wheels shall be pointed in the straight-ahead position and the vehicle's mass shall be adjusted to that of the mass in running order, but without the driver, before the measurements are made.

3.1.2. Where the vehicle is equipped with hydro-pneumatic, hydraulic or pneumatic suspension or another device which can be adjusted in relation to load, it shall be tested with the suspension or device in the normal running condition, as specified by the manufacturer.

3.1.3. Where the primary and visible side of the registration test plate is facing downwards, the inclination measurement shall be expressed as a negative (minus) angle.

3.2. Projections shall be measured perpendicularly and directly towards the nominal surface to be covered by the registration plate.

3.3. The gap between the edge of the mounted and fixed registration test plate and the surface shall be measured perpendicularly and directly towards the actual surface to be covered by the plate.

3.4. The registration plate used for checking conformity shall have one of the two size as specified in paragraph 2.2.1. and a thickness not exceeding 4.0 mm.

PART 3

EU TYPE-APPROVAL CERTIFICATE (VEHICLE SYSTEM)

Communication concerning *granting* / *extension* / *refusal* / *withdrawal* ([1]) of type-approval of a type of vehicle with regard to the registration plate spaces in accordance with the requirements laid down in Annex III to Regulation (EU) 2020/… [*Please insert reference to this Regulation*], as last amended by Regulation (EU) No …/…

Number of the EU type-approval certificate:

Reason for *extension* / *refusal* / *withdrawal* ([1]):

SECTION I
[…]
SECTION II
[…]

Addendum
to EU type-approval certificate number …

1. Additional information:

1.1. Brief description of the vehicle type as regards its structure, dimensions, lines and constituent materials:

1.2. Description of the registration plate spaces (front and rear):

2. Registration plate space is suitable for fixing a registration plate size up to (mm):

2.1. Front: *520 × 120* / *340 × 240* ([1])

2.2. Rear: *520 × 120* / *340 × 240* ([1])

2.3. Second rear registration plate in case of vehicles of category O_2, O_3 and O_4: *520 × 120* / *340 × 240* ([1])

4. Rear registration plate space obscured when any mechanical coupling device is fitted: *yes* / *no* ([1])

5. Remarks:

([1]) Delete where not applicable.

ANNEX IV

WINDSCREEN WIPER AND WASHER SYSTEMS

PART 1

Section A

Information document for EU type-approval of motor vehicles with regard to their windscreen wiper and washer systems

MODEL

Information document No … relating to the EU type-approval of a motor vehicle with regard to its windscreen wiper and washer systems.

The following information shall be supplied in triplicate and include a list of contents. Any drawings or pictures shall be supplied in appropriate scale and in sufficient detail on size A4 or on a folder of A4 format. Photographs, if any, shall show sufficient detail.

0.

0.1.

0.2.

0.2.1.

0.3.

0.3.1.

0.4.

0.5.

0.8.

0.9.

1.

1.1.

3.

3.2.

3.2.1.8.

3.2.5.

3.2.5.1.

3.2.5.2.

3.2.5.2.1.

3.2.5.2.2.

3.3.

3.3.1.1.

3.3.1.2.

3.3.2.

3.3.2.3.

3.4.

3.4.1.

3.4.2.

3.4.4.

3.4.4.5.

3.4.4.6.

4.

4.7.

9.

9.2.

9.4.

9.4.1.

9.5.

9.5.1.

9.5.1.1.

9.5.1.2.

9.5.1.3.

9.5.1.4.

9.5.1.5.

9.6.

9.6.1.

9.7.

9.7.1.

9.8.

9.8.2.

9.10.

9.10.3.

9.10.3.5.

9.10.3.5.1.

9.10.3.6.

9.10.3.6.1.

Explanatory notes

Information document numbering in accordance with the template laid down in Annex I to Commission Implementing Regulation (EU) 2020/683.

Section B

Information document for EU type-approval of windscreen washer systems as separate technical units

MODEL

Information document No … relating to the EU type-approval as a separate technical unit of windscreen washer systems.

The following information shall be supplied in triplicate and include a list of contents. Any drawings shall be supplied in appropriate scale and in sufficient detail on size A4 or on a folder of A4 format. Photographs, if any, shall show sufficient detail.

Where systems, components or separate technical units, referred to in this information document, have electronic controls, information concerning their performance shall be provided.

0.

0.1.

0.2.

0.3.

0.3.1.

0.4.

0.5.

0.7.

0.8.

0.9.

9.7.

9.7.1.

_____

Explanatory notes

Information document numbering in accordance with the template laid down in Annex I to Commission Implementing Regulation (EU) 2020/683.

PART 2

Technical requirements and test procedure

1. For the purposes of this Annex, the following definitions shall apply:

1.1. *'wiper field'* means the area(s) on the windscreen which is wiped by the wiper blade(s) when the wiper system is operating under normal conditions;

1.2. *'intermittent operation of the wiper system'* means an automatic non-continuous mode of operation of the wiper system, where after each full cycle there is a period during which the wipers are stationary in one specific designated halting position;

1.3. *'washer control'* means the device by which the washer system is manually activated and deactivated;

1.4. *'washer pump'* means a device for transferring fluid from the washer system storage reservoir to the outer face of the windscreen;

1.5. *'nozzle'* means a device which serves to direct fluid onto the windscreen;

1.6. *'fully primed system'* means a system which has been activated normally for a period of time and where fluid has been transferred through the pump, tubing and has exited the nozzle(s);

1.7. *'cleaned area'* means the previously soiled area which does not have any traces of drops and remaining dirt after it has dried completely;

1.8. *'vision area A'* means test area A as defined in point 2.2. of Annex 21 to UN Regulation No 43 on uniform provisions concerning the approval of safety glazing materials and their installation on vehicles[1];

1.9. *'vision area B'* means reduced test area B as defined in point 2.4. of Annex 21 to UN Regulation No 43, without the exclusion of the area defined in point 2.4.1. (i.e. vision area A is included);

1.10. *'three-dimensional reference system'* means a reference grid as described in Annex 1 to the Consolidated Resolution on the Construction of Vehicles (R.E.3);

1.11. *'vehicle master control switch'* means the device by which the vehicle's on-board electronics system is brought from being switched off, as is the case when a vehicle is parked without the driver being present, to normal operation mode.

2. Technical requirements

2.1. Windscreen wiper system.

2.1.1. Every vehicle that is fitted with a windscreen shall be equipped with a windscreen wiper system which is able to function when the vehicle master control switch has been activated, without any action by the driver other than switching the operating control, needed for starting and stopping the windscreen wiper system, to the on position.

[1] Regulation No 43 of the Economic Commission for Europe of the United Nations (UN/ECE) — Uniform provisions concerning the approval of safety glazing materials and their installation on vehicles (OJ L 42, 12.2.2014, p. 1).

2.1.1.1. The windscreen wiper system shall consist of one or more wiper arms which shall have wiper blades that are easily replaceable.

2.1.2. The windscreen wiper field shall cover at least 98% of vision area A.

2.1.3. The windscreen wiper field shall cover at least 80% of vision area B.

2.1.4. The windscreen wiper field shall meet the requirements of point 2.1.2. and 2.1.3. when the system is operating at a sweep frequency corresponding to point 2.1.5.1. and shall be tested under the conditions as set out in points 3.1.10. to 3.1.10.3.

2.1.5. The windscreen wiper system shall have at least two sweep frequency settings:

2.1.5.1. One frequency of not less than 10 and not more than 55 cycles per minute.

2.1.5.2. One frequency of not less than 45 complete cycles per minute.

2.1.5.3. The difference between the highest and a lower sweep frequency setting shall be at least 15 cycles per minute.

2.1.5.4. Intermittent operation of the windscreen wiper system may be used to comply with the requirements of points 2.1.5.1. to 2.1.5.3.

2.1.6. The frequencies referred to in points 2.1.5. to 2.1.5.3. shall be tested under the conditions as set out in points 3.1.1. to 3.1.6 and 3.1.8.

2.1.7. Where the windscreen wiper system is stopped as a result of switching the operating control to the off position, the wiper arm(s) and blade(s) shall return to their position of rest.

2.1.8. The windscreen wiper system shall be capable of withstanding stalling for at least 15 seconds. The use of automatic circuit protection devices is allowed, provided that for possible resetting no action is required other than operation of the windscreen wiper operating control.

2.1.9. The capability to withstand stalling of the windscreen wiper system referred to in point 2.1.8. shall be tested under the conditions as set out in point 3.1.7..

2.1.10. Where the position of rest of the windscreen wiper arm(s) or blade(s) is not outside of vision area B, it shall be possible to manually displace the wiper arm(s) in such a manner that the wiper blade(s) can be lifted from its/their position on the windscreen to allow that the windscreen is manually cleaned.

2.1.11. The windscreen wiper system shall be capable of operating for 120 seconds on a dry windscreen in an ambient temperature of -18°C, without degradation of performance.

2.1.12. The performance of the windscreen wiper system at -18ºC shall be tested under the conditions as set out in paragraph 3.1.11.

2.1.13. The windscreen wiper system shall continue to meet the requirements of point 2.1.2. without any degradation of efficiency, when it is operating at maximum frequency and when the vehicle is subjected to a relative air speed equal to 80% of the vehicle's maximum design speed or 160 km/h, whichever is lower. Vision area A of the windshield shall be prepared in accordance with points 3.1.8. and 3.1.9. The aerodynamic effects associated with the size and shape of the windscreen, wiper arm(s) and wiper blade(s) shall be verified under these conditions, also taking into account point 3.1.9.1. During the test, the wiper blade(s) shall remain in contact with the windscreen and complete lift-off shall not be permitted. The wiper blade(s) shall stay in full contact with the windscreen in the area as established in point 2.1.2. for each complete cycle and any partial lift-off during upwards as well as downwards stroke shall not be permitted.

2.2. Windscreen washer system.

2.2.1. Every vehicle that is fitted with a windscreen shall be fitted with a windscreen washer system which is able to function when the vehicle master control switch has been activated, and which is capable of withstanding the loads and pressures resulting when the nozzles are plugged and the system is actuated in accordance with the procedure set out in points 3.2.1.1. to 3.2.1.1.2..

2.2.2. The performance of the windscreen washer system shall not be adversely affected by exposure to the temperature cycles in accordance with points 3.2.1. to 3.2.5..

2.2.3. The windscreen washer system shall have the ability to spray fluid onto the target area of the windscreen, without any trace of leakage, disconnection of any tubing and malfunctioning of any nozzle, at normal conditions when subjected to ambient temperatures between -18ºC and 80ºC. In addition, when the nozzles are blocked, the system shall also show no signs of leakage and disconnection of any tubing.

2.2.4. The windscreen washer system shall be capable of delivering sufficient fluid to clear at least 60% of vision area A, under the conditions as set out in points 3.2.6. to 3.2.6.4.

2.2.5. The windscreen washer system shall be capable of being manually activated by means of the washer control. In addition, activation and deactivation of the system may also be coordinated and combined with any other vehicle system.

2.2.6. The capacity of the reservoir containing the liquid shall be ≥ 1.0 litre.

3. Test procedure

3.1. Windscreen wiper system test conditions.

3.1.1. The tests described below shall be carried out under the conditions as stated in points 3.1.2. to 3.1.5. unless specified otherwise.

3.1.2. The ambient temperature shall be between 5°C and 40°C.

3.1.3. The windscreen shall be kept constantly wet.

3.1.4. In the case of an electric windscreen wiper system, the following additional conditions shall be met.

3.1.4.1. All batteries shall be fully charged at the start of the test.

3.1.4.2. The engine, if fitted, shall run at a speed not exceeding 30% of the speed corresponding to its maximum power output. However, where this is proven not to be practicable due to specific engine control strategies, for instance in the case of electric hybrid vehicles, a realistic scenario taking into account the engine speeds, periodical absence or complete absence of a running engine during normal driving conditions, shall be determined. Where the windscreen wiper system can meet the requirements without a running engine, the engine does not have to run.

3.1.4.3. The passing beam headlamps shall be switched on.

3.1.4.4. All fitted heating, ventilation, defrosting and demisting systems (regardless of the location in the vehicle) shall be operating at maximum electrical consumption.

3.1.5. Compressed air or vacuum operated windscreen wiper systems shall be able to function continuously at the prescribed sweep frequencies whatever the engine speed and engine load or minimum and maximum battery charge levels specified by the manufacturer for normal operation.

3.1.6. The sweep frequencies of the windscreen wiper system shall comply with the requirements of points 2.1.5. to 2.1.5.3. after a preliminary operating time of 20 minutes on a wet windshield.

3.1.7. The requirements of point 2.1.8. shall be considered to be satisfied when the wiper arms are restrained in a position corresponding to half a cycle, for a period of 15 seconds with the windscreen wiper control set at the maximum sweep frequency.

3.1.8. The outer face of the windscreen shall be thoroughly degreased by means of methylated spirit or an equivalent degreasing agent. After drying, a solution of ammonia of not less than 3 % and not more than 10 % shall be applied. The surface shall be allowed to dry again and shall then be wiped with a dry cotton cloth.

3.1.9. A coating of the test mixture, in accordance with the specifications as laid down in point 4., shall be applied uniformly to the outer surface of the windscreen and allowed to dry.

3.1.9.1. Where the outer face of the windscreen has been prepared in accordance with points 3.1.8. and 3.1.9., the windscreen washer system may be used during the applicable tests.

3.1.10. The wiper field of the windscreen wiper system, as referred to in point 2.1.4., shall be determined as follows.

3.1.10.1. The outer face of the windscreen shall be treated in accordance with points 3.1.8. and 3.1.9.

3.1.10.2. In order to verify that the requirements of points 2.1.2. and 2.1.3. are met, the windscreen wiper system shall be activated, taking into account point 3.1.9.1., and a trace of the wiper field shall be made and compared to a trace of the vision areas A and B.

3.1.10.3. The technical service may agree to an alternative test procedure (eg. virtual testing) to verify that the requirements of paragraphs 2.1.2. and 2.1.3..

3.1.11. The requirements of point 2.1.11. shall be met at an ambient temperature of -18 ± 3°C at which the vehicle has been stored for minimum four hours. The vehicle

shall be prepared to operate under the conditions set out in points 3.1.4. and 3.1.5. During the test, the wiper system shall be operating normally, but at the maximum sweep frequency. The wiper field does not have to be observed.

3.2. Windscreen washer system test conditions.

3.2.1. Test No. 1
The windscreen washer system shall be filled with water, fully primed, and placed in an ambient temperature of 20 ± 2°C for a minimum of four hours. The water shall be stabilized at that temperature.

3.2.1.1. All nozzle outlets shall be plugged at the location where the fluid exits those nozzles and the windscreen washer control shall be actuated six times in one minute, each time for at least three seconds.

3.2.1.1.1. Where the windscreen washer system is powered by the muscular energy of the driver, the force applied shall be 11,0 to 13,5 daN in case of a hand operated pump. The force applied shall be 40,0 to 44,5 daN in case of a foot operated pump.

3.2.1.1.2. In case of electric pumps, the test voltage shall not be less than the rated voltage and not more than the rated voltage plus 2 Volt.

3.2.1.2. The performance of the windscreen washer system at the end of the test shall be in compliance with point 2.2.3.

3.2.2. Test No. 2
The windscreen washer system shall be filled with water, fully primed, and placed in an ambient temperature of -18 ± 3°C for a minimum of four hours. The water does not have to be stabilized at this temperature.

3.2.2.1. The windscreen washer control shall be actuated six times in one minute, each time for at least three seconds, in accordance with points 3.2.1.1.1. and 3.2.1.1.2. The system shall then be placed in an ambient temperature of 20 ± 2°C until the ice has completely thawed. The water does not have to be stabilized at this temperature. The performance of the windscreen washer system shall then be verified by actuating the system in accordance with points 3.2.1.1. and 3.2.1.2.

3.2.3. Test No. 3
Low temperature cycle exposure test

3.2.3.1. The windscreen washer system shall be filled with water, fully primed, and placed in an ambient temperature of -18 ± 3°C for a minimum of four hours so that the total mass of the water in the washer system is frozen. The system shall then be placed in an ambient temperature of 20 ± 2ºC until the ice has completely thawed, but in any case no longer than four hours. This freeze/thaw cycle shall be repeated six times. Finally, when the windscreen washer system is placed in the ambient temperature of 20 ± 2ºC and the ice has completely thawed, although the water does not have to be stabilized at this temperature, the performance of the windscreen washer system shall be verified by actuating the system in accordance with points 3.2.1.1. and 3.2.1.2.

3.2.3.2. The windscreen washer system shall be filled and fully primed with a low-temperature windscreen washer fluid consisting of a 50% solution of methanol, or alternatively isopropyl alcohol, in water with a hardness not exceeding 205 mg/l (Ca). The system shall be placed in an ambient temperature of -18 ± 3°C for a minimum of four hours.

The fluid does not have to be stabilized at this temperature. The performance of the windscreen washer system shall then be verified by actuating the system in accordance with points 3.2.1.1. and 3.2.1.2.

3.2.4. Test No. 4
High temperature cycle exposure test

3.2.4.1. If any part of the windscreen washer system is situated in the engine compartment, the system shall be filled with water, fully primed, and placed in an ambient temperature of 80 ± 3°C for a minimum of eight hours. The water does not have to be stabilized at this temperature. The performance of the windscreen washer system shall then be verified by actuating the system in accordance with points 3.2.1.1. and 3.2.1.2.

3.2.4.2. If no part of the windscreen washer system is situated in the engine compartment, the system shall be filled with water, fully primed, and placed in an ambient temperature of 80 ± 3°C for a minimum of eight hours. The water does not have to be stabilized at this temperature. Subsequently, the system is placed in an ambient temperature of 20 ± 2°C. When the temperature of the water has stabilized, the performance of the windscreen washer system shall be verified by actuating the system in accordance with points 3.2.1.1. and 3.2.1.2. After this, the system shall be filled with water, fully primed, and placed in an ambient temperature of 60 ± 3°C for a minimum of eight hours. The water does not have to be stabilized at this temperature. The performance of the windscreen washer system shall then be verified by actuating the system in accordance with points 3.2.1.1. and 3.2.1.2. Alternatively, the manufacturer may request that the windscreen washer system is tested under the conditions set out in point 3.2.4.1.

3.2.5. The windscreen washer tests as set out in points 3.2.1. to 3.2.4.2. shall be carried out in sequence on the same windscreen washer system. The system may be either tested as installed on the vehicle type for which EU type-approval is sought, or separately. In case EU type-approval is sought for a separate technical unit, the system shall be tested separately.

3.2.6. Test No. 5
Windscreen washer system capability test

3.2.6.1. The windscreen washer system shall be filled with water and fully primed. With the vehicle stationary and no significant wind effect, the nozzle(s) may be adjusted as to being pointed towards the target area on the outer face of the windscreen.

3.2.6.2. The outer face of the windscreen shall be treated as set out in points 3.1.8 and 3.1.9.

3.2.6.3. The windscreen washer system shall be actuated in accordance with the manufacturer's instructions, taking into account points 3.2.1.1.1 and 3.2.1.1.2. The total duration of the test shall not exceed 10 complete cycles of automatic operation of the windscreen wiper system operating at the maximum sweep frequency.

3.2.6.4. In order to verify that the requirements of point 2.2.4. are met, a trace of the relevant cleaned area shall be made and compared to a trace of vision area A. If it is obvious to the observer that the requirements are met, it is not required that the traces are prepared.

3.2.7. The test as set out in points 3.2.6. to 3.2.6.4. shall always be performed on the vehicle type for which EU type-approval is sought, even in the case when an approved

separate technical unit is installed on the vehicle.

4. Specifications of the test mixture for testing the windscreen wiper and washer systems.

4.1. The test mixture referred to in point 3.1.9. shall consist of the following:

4.1.1 Water, with a hardness of less than 205 mg/l (Ca): 92.5% by volume.

4.1.2. Aqueous saturated salt (sodium chloride), solution: 5.0% by volume.

4.1.3. Dust, in accordance with the specifications of points 1.2.1. to 1.2.2.6. below: 2.5% by volume.

4.1.3.1. Specifications of the test dust analysis

4.1.3.1.1. 68 ± 1% SiO_2 by mass

4.1.3.1.2. 4 ± 1% Fe_2O_3 by mass

4.1.3.1.3. 16 ± 1% Al_2O_3 by mass

4.1.3.1.4. 3 ± 1% CaO by mass

4.1.3.1.5. 1.0 ± 0.5% MgO by mass

4.1.3.1.6. 4 ± 1% Alkalis by mass

4.1.3.1.7. 2.5 ± 0.5% Ignition loss by mass

4.1.3.2. Specifications of the particle-size distribution in course-grade dust

4.1.3.2.1. 12 ± 2% of 0 to 5 µm particle-size

4.1.3.2.2. 12 ± 3% of 5 to 10 µm particle-size

4.1.3.2.3. 14 ± 3% of 10 to 20 µm particle-size

4.1.3.2.4. 23 ± 3% of 20 to 40 µm particle-size

4.1.3.2.5. 30 ± 3% of 40 to 80 µm particle-size

4.1.3.2.6. 9 ± 3% of 80 to 200 µm particle-size

PART 3

Section A

EU TYPE-APPROVAL CERTIFICATE (VEHICLE SYSTEM)

Communication concerning *granting* / *extension* / *refusal* / *withdrawal* ([1]) of type-approval of a type of vehicle with regard to the windscreen wiper and washer systems, in accordance with the requirements laid down in Annex IV to Regulation (EU) 2020/… [*Please insert reference to this Regulation*], as last amended by Regulation (EU) No …/…

Number of the EU type-approval certificate:

Reason for *extension* / *refusal* / *withdrawal* ([1]):

SECTION I
[…]
SECTION II

Addendum
to EU type-approval certificate number . . .

1. Additional information:

1.1. Brief description of the vehicle type as regards its structure, dimensions, lines and constituent materials:

1.2. Description of the method of operation of the wiper and washing systems:

1.3. Detailed description of the wiper system (i.e. number of blades, blade lengths, wiper arm dimensions, etc.):

1.4. Detailed description of the washer system (i.e. number of nozzles, number of outlet ports per nozzle, washer pump, fluid storage container, washer line hoses and their mounting to pump and nozzles, etc.)

1.5. Fluid storage capacity (litre):

1.6. Maximum vehicle design speed (km/h):

2. Hand of drive: left / right ([1])

3. Left hand drive and mirror-opposite right hand drive systems : yes / no ([1])

4. Aerodynamic spoiler fitted onto the wiper arm / wiper blade ([1]) at driver side / centre / passenger side / … ([1])

5. Remarks:

Section B

EU TYPE-APPROVAL CERTIFICATE (SEPARATE TECHNICAL UNIT)

Communication concerning *granting* / *extension* / *refusal* / *withdrawal* ([1]) of type-approval of a STU with regard to type of windscreen washer systems in accordance with the requirements laid down in Annex IV to Regulation (EU) 2020/… [*Please insert reference to this Regulation*], as last amended by Regulation (EU) No …/…

Number of the EU type-approval certificate:

Reason for *extension* / *refusal* / *withdrawal* ([1]):

SECTION I
[…]
SECTION II
[…]

Addendum
to EU type-approval certificate number …

1. Additional information:

1.1. Brief description of the type of separate technical unit:

1.2. Detailed description of the washer system:

1.2.1. Number of nozzles:

1.2.2. Number of outlet ports per nozzle:

1.2.3. Description of washer line hoses and its mounting to pump and nozzles:

1.2.4. Description of washer pump:

1.2.5. Fluid storage capacity (litre):

2. Suitable for hand of drive: left / right ([1])

3. Any part of the system may be situated in the engine compartment: yes / no ([1])

4. Separate technical unit: universal / vehicle specific ([1])

5. Remarks:

6. List of vehicle types for which the separate technical unit has been approved (where applicable):

_____

([1]) Delete where not applicable.

Section C

EU type-approval mark of separate technical unit

1. The EU type-approval mark for separate technical units referred to in Article 38(2) of Regulation (EU) 2018/858 shall consist of the following:

1.1. A rectangle surrounding the lower-case letter ‘e’, followed by the distinguishing number of the Member State which has granted the EU type-approval for the component or separate technical unit in accordance with the following:

1	for Germany	19	for Romania
2	for France	20	for Poland
3	for Italy	21	for Portugal
4	for The Netherlands	23	for Greece
5	for Sweden	24	for Ireland
6	for Belgium	26	for Slovenia
7	for Hungary	27	for Slovakia
8	for the Czech Republic	29	for Estonia
9	for Spain	32	for Latvia
12	for Austria	34	for Bulgaria
13	for Luxembourg	36	for Lithuania
17	for Finland	49	for Cyprus
18	for Denmark	50	for Malta

1.2. In the vicinity of the rectangle, two digits indicating the series of amendments laying down the requirements with which this separate technical units complies, “00” at present, followed by a space and the five-digit number referred to in point 2.4 of Annex IV of Regulation (EU) 2018/858.

2. The EU type-approval mark of the separate technical units shall be indelible and clearly legible.

3. An example of an EU separate technical unit type-approval mark is shown in Figure 1.

Figure 1

Example of EU separate technical unit type-approval mark

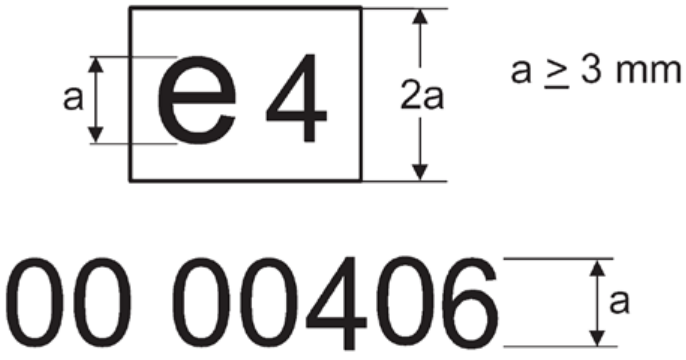

Explanatory note

Legend The EU separate technical unit type-approval was issued by The Netherlands under number 00406. The first two digits "00" indicate that the separate technical unit was approved in accordance with this Regulation.

ANNEX V

WHEEL GUARDS

PART 1
Information document for EU type-approval of vehicles with regard to wheel guards

MODEL

Information document No … relating to the EU type-approval of a vehicle with regard to wheel guards.

The following information shall be supplied in triplicate and include a list of contents. Any drawings or pictures shall be supplied in appropriate scale and in sufficient detail on size A4 or on a folder of A4 format. Photographs, if any, shall show sufficient detail.

0.

0.1.

0.2.

0.2.1.

0.3.

0.3.1

0.4.

0.5.

0.8.

0.9.

1.

1.1.

1.3.

1.8.

1.3.2.

1.3.3.

2.

2.3.

2.3.1.

2.3.2.

2.3.3.

2.3.4.

2.4.

2.4.1.

2.4.1.2.

2.4.1.3.

2.4.2.

2.4.2.2.

2.4.2.3.

2.6.

6.

6.2.1.

6.6.

6.6.1.

6.6.1.1.

6.6.1.1.1.

6.6.1.1.2.

etc.

6.6.4.

9.

9.16.

9.16.1.

9.16.2.

Explanatory notes

Information document numbering in accordance with the template laid down in Annex I to Commission Implementing Regulation (EU) 2020/683.

PART 2

Technical requirements and test procedure

1. For the purposes of this Annex, the following definitions shall apply:

1.1. *'tyre envelope'* means the maximum section width and outer-diameter of a tyre, including tolerances, as permitted and specified according to its component approval;

1.2. *'snow traction device'* means a snow chain or other equivalent device providing traction in snow, which shall be able to be mounted onto the vehicle's tyre/wheel combination and which is not a snow tyre, winter tyre, all-season tyre or any other tyre by itself.

2. Technical requirements

2.1. General provisions:

2.1.1. The vehicle shall be provided with a wheel guard for each wheel.

2.1.2. The wheel guard may consist of parts of the bodywork or separate mudguards and shall be so designed as to protect road users, as far as possible, against thrown-up stones, mud, ice, snow and water and to reduce the dangers due to contact with rotating wheels.

2.2. Specific requirements:

2.2.1. The wheel guards shall meet the requirements from point 2.2.1.1. to 2.2.1.4. with the vehicle's mass adjusted to that of the manufacturer's declared mass in running order with one additional passenger on the first seating row, if applicable, and any steered wheels in the straight ahead position.

2.2.1.1. In the part formed by radial planes at an angle of 30° towards the front and 50° towards the rear of the centre of the wheels (see Figure 1), the overall width (q) of the wheel guard shall be at least sufficient to cover the total tyre width (b) taking into account the tyre envelope as well as the extremes of the tyre/wheel combination(s) as specified by the manufacturer. In the case of twin wheels, the tyre envelopes and total width over the two tyres (t) shall be taken into account.

2.2.1.1.1. For the purposes of determining the widths referred to in point 2.2.1.1, the labelling (marking) and decorations, protective bands or ribs on tyre walls shall not be taken into account.

2.2.1.2. The rear of the wheel guard shall not terminate above a horizontal plane 150 mm above the axis of rotation of the wheels, furthermore:

2.2.1.2.1. In case of single wheels, the intersection of the rear edge of the wheel guard with the horizontal plane as referred to in point 2.2.1.2. (see Figure 1, point A) shall lie outwards of the median longitudinal plane of the tyre.

2.2.1.2.2. In the case of twin wheels, the intersection of the rear edge of the wheel guard with the horizontal plane as referred to in point 2.2.1.2. (see Figure 1, point A) at the outside wheel shall lie outwards of the median longitudinal plane of the outermost tyre.

2.2.1.3. The contour and location of each wheel guard shall be such that they are as close to the tyres as possible. In particular within the part formed by the radial planes referred to in point 2.2.1.1., the following requirements shall be satisfied:

2.2.1.3.1. The depth (p) of the recess situated in the vertical plane of the tyre axis, measured from the outward and inward edges of the wheel guard at the vertical longitudinal plane passing through the centre of the tyre inside the wheel guard, shall be at least 30 mm. That depth (p) may be reduced progressively to zero towards the radial planes specified in point 2.2.1.1.

2.2.1.3.2. The distance (c) between the lower edges of the wheel guard and the axis passing through the centre of rotation of the wheels shall not exceed 2 × r, where the radius (r) is the static radius of the tyre.

2.2.1.4. In the case of vehicles having an adjustable suspension height, the requirements in points 2.2.1.3.1. and 2.2.1.3.2. shall be met when the vehicle is in the normal running position as specified by the vehicle manufacturer.

2.2.2. The wheel guards may consist of several components, provided that no gaps exist between or within the individual parts when assembled.

2.2.3. The wheel guards shall be firmly attached. However, it is allowed for them to be detachable either as a unit or in parts.

2.3. Use of snow traction devices

2.3.1. In the case of vehicles where only two wheels are driven, the manufacturer shall certify that the vehicle is so designed that at least one type of snow traction device can be used on at least one of the tyre and wheel combinations approved for the driven axle of the vehicle. The snow traction device and tyre/wheel combination(s) suitable for the vehicle type shall be specified by the manufacturer under item 6.6.4. of the information document.

2.3.2. In the case of vehicles where all wheels are driven, including vehicles where drive axles can be disengaged either manually or automatically, the manufacturer shall certify that the vehicle is so designed that at least one type of snow traction device can be used on at least one of the tyre and wheel combinations approved for the driven axle, which cannot be disengaged, of the vehicle. The snow traction device and tyre/wheel combination(s) suitable for the vehicle type shall be specified by the manufacturer under item 6.6.4. of the information document.

2.3.3. The vehicle manufacturer shall include relevant instructions regarding the correct use of the specified snow traction devices in the motor vehicle's user instructions (e.g. owner's manual, vehicle handbook).

Figure 1

Diagram of wheel guard

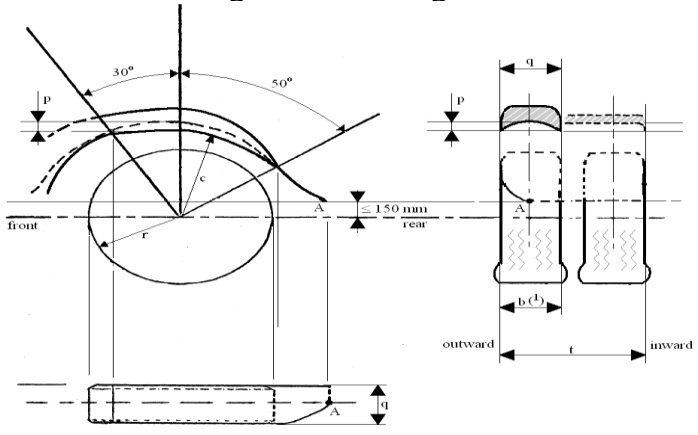

Explanatory note

(1) The tyre width (b) is determined at the top part of the tyre (tyre section width between the radial planes as referred to in point 2.2.1.1.).

PART 3

EU TYPE-APPROVAL CERTIFICATE (VEHICLE SYSTEM)

Communication concerning *granting* / *extension* / *refusal* / *withdrawal* ([1]) of type-approval of a type of vehicle with regard to the wheel guards in accordance with the requirements laid down in Annex V to Regulation (EU) 2020/… [*Please insert reference to this Regulation*], as last amended by Regulation (EU) No …/…

Number of the EU type-approval certificate:

Reason for *extension* / *refusal* / *withdrawal* ([1]):

SECTION I
[…]
SECTION II
[…]

Addendum
to EU type-approval certificate number . . .

1. Additional information:

1.1. Brief description of the vehicle type as regards its structure, dimensions, lines and constituent materials:

1.2. Description of the wheel guards:

1.3. Tyre/wheel combination(s) (including tyre size, rim size and wheel off-set):

1.4. Description of the type of snow traction device(s) which may be used:

1.5. Tyre/wheel combination(s) (including tyre size, rim size and wheel off-set) to be used with the snow traction device(s):

2. Permanently driven axle(s): *axle 1* / *axle 2* / *...* ([1])

3. Suspension height adjustable: *yes* / *no* ([1])

4. Wheel guards *detachable* / *not detachable* ([1]) *as a unit* / *in parts* ([1])

5. Remarks:

ANNEX VI

WINDSCREEN DEFROSTING AND DEMISTING SYSTEMS

PART 1

Information document for EU type-approval of motor vehicles with regard to windscreen defrosting and demisting systems

MODEL

Information document No … relating to the EU type-approval of a motor vehicle with regard to windscreen defrosting and demisting systems.

The following information shall be supplied in triplicate and include a list of contents. Any drawings or pictures shall be supplied in appropriate scale and in sufficient detail on size A4 or on a folder of A4 format. Photographs, if any, shall show sufficient detail.

0.

0.1.

0.2.

0.2.1.

0.3.

0.3.1

0.4.

0.5.

0.8.

0.9.

1.

1.1.

1.6.

1.8.

3.

3.1.

3.1.1.

3.2.

3.2.1.

3.2.1.1.

3.2.1.2.

3.2.1.3.

3.2.1.6.

3.2.1.8.

3.2.2.

3.2.2.1.

3.2.5.

3.2.5.1.

3.2.5.2.

3.2.5.2.1.

3.2.5.2.2.

3.2.7.

3.2.7.1.

3.2.7.2.

3.2.7.2.1.

3.2.7.2.2.

3.2.7.2.3.

3.2.7.2.3.1.

3.2.7.2.3.2.

3.2.7.2.4.

3.2.7.2.5.

3.2.7.3.

3.2.7.3.1.

3.2.7.3.2.

3.2.7.3.2.1.

3.2.7.3.2.2.

3.3.

3.3.1.

3.3.1.1.1.

3.3.1.2.

3.3.2.

3.3.2.1.

3.3.2.2.

3.3.2.3.

3.3.2.4.

3.4.

3.4.1.

3.4.2.

3.4.3.

3.4.3.1.

3.4.3.1.1.

3.4.3.1.2.

3.4.3.1.3.

3.4.4.

3.4.4.1.

3.4.4.2.

3.4.4.3.

3.4.4.4.

3.4.4.5.

3.4.4.6.

3.6.

3.6.1.

3.6.1.1.

3.6.1.2.

3.6.1.2.1.

3.6.1.2.2.

3.6.2.

3.6.3.

9.

9.1.

9.2.

9.3.

9.3.1.

9.4.

9.4.1.

9.4.2.

9.5.

9.5.1.

9.5.1.1.

9.5.1.2.

9.5.1.3.

9.5.1.4.

9.5.1.5.

9.6.

9.6.1.

9.7.

9.7.1.

9.8.

9.8.1.

9.8.2.

9.10.

9.10.1.

9.10.1.1.

9.10.1.3.

9.10.3.

9.10.3.1.

9.10.3.1.1.

9.10.3.5.

9.10.3.5.1.

9.10.3.6.

9.10.3.6.1.

Explanatory notes

Information document numbering in accordance with the template laid down in Annex I to Commission Implementing Regulation (EU) 2020/683.

PART 2

Technical requirements and test procedure

1. For the purposes of this Annex, the following definitions shall apply:

1.1. *'defrosted area'* means the area of the windscreen having a dry outside surface or an outside surface covered with melted or partially melted wet frost which can be removed by the vehicle's windscreen wiper system;

1.2. *'mist'* means a film of condensate on the inside face of the glazed surface of the windscreen;

1.3. *'demisted area'* means the area of the windscreen having a dry inside surface, without any drops or traces of water, after previously being covered by mist;

1.4. *'vision area A'* means test area A as defined in point 2.2. of Annex 21 to UN Regulation 43;

1.5. *'vision area B'* means reduced test area B as defined in point 2.4. of Annex 21 to UN Regulation 43, without the exclusion of the area defined in point 2.4.1. (i.e. vision area A is included);

1.6. *'vehicle master control switch'* means the device by which the vehicle's on-board electronics system is brought from being switched off, as is the case when a vehicle is parked without the driver being present, to normal operation mode;

2. Technical requirements

2.1. Windscreen defrosting

2.1.1. Every vehicle that is fitted with a windscreen shall be equipped with a system for removing frost and ice from the exterior glazed surface of the windscreen. The windscreen defrosting system shall be effective enough to ensure adequate visibility through the windscreen in cold weather.

2.1.2. The efficiency of the system shall be verified by determining the defrosted area of the windscreen periodically after starting, the vehicle having been kept in a cold chamber for a certain amount of time.

2.1.3. The requirements of points 2.1.1. and 2.1.2. shall be checked using the method set out in point 3.1..

2.1.4. The following requirements shall be satisfied:

2.1.4.1. 20 minutes after the start of the test period, vision area A shall be 80% defrosted;

2.1.4.2. 25 minutes after the start of the test period, the defrosted area of the windscreen on the passenger side shall be comparable to the area referred to specified in point 2.1.4.1. for the driver's side;

2.1.4.3. 40 minutes after the start of the test period, vision area B shall be 95 % defrosted.

2.2. Windscreen demisting

2.2.1. Every vehicle that is fitted with a windscreen shall be equipped with a system for removing mist from the interior glazed surface of the windscreen.

2.2.2. The demisting system shall be effective enough to restore visibility through the windscreen in case it is fogged up with mist. Its efficiency shall be verified in accordance with the procedure described in point 3.2..

2.2.3. The following requirements shall be satisfied:

2.2.3.1. Vision area A shall be 90% demisted in 10 minutes;

2.2.3.2. Vision area B shall be 80% demisted in 10 minutes.

3. Test procedures

3.1. Windscreen defrosting

3.1.1. The test shall be carried out at a temperature of -8 ± 2°C or -18 ± 3°C, as selected by the manufacturer.

3.1.1.1. The test shall be carried out in a cold chamber large enough to contain the complete vehicle and equipped to maintain one of the temperatures mentioned in point 3.1.1 in the chamber throughout the test and to circulate cold air. The cold chamber shall be maintained at or below the specified test temperature for not less than 24 hours before the start of the period during which the vehicle is exposed to cold.

3.1.2. Before the test, the inner and outer surfaces of the windscreen shall be thoroughly degreased by means of methylated spirit or an equivalent degreasing agent. After drying, a solution of ammonia of not less than 3% and not more than 10% shall be applied. The surface shall be allowed to dry again and then be wiped with a dry cotton cloth.

3.1.3. The vehicle shall be switched off and shall be kept at the test temperature for not less than 10 hours prior to commencement of the test.

3.1.3.1. Where it is possible to check whether the vehicle's engine coolant and lubricant are stabilized at the test temperature, the period referred to in point 3.1.3. may be shortened.

3.1.4. Following the exposure period prescribed in point 3.1.3, an even layer of ice of 0,044 g/cm^2 shall be applied over the entire outside surface of the windscreen by means of a water spray gun working at 3,5 ± 0.2 bar operating pressure.

3.1.4.1. The spray nozzle, adjusted to full fan pattern and maximum flow, shall be held perpendicular to and at a distance of between 200 and 250 mm from the glazed surface, and so directed as to form an even layer of ice right across the windscreen from one side to the other.

3.1.4.1.1. A spray gun having a nozzle of 1,7 mm diameter and a liquid flow rate of 0,395 l/min, and capable of producing a fan pattern of 300 mm diameter on the glazed surface at a distance 200 mm from that surface, may be used to satisfy the requirements of point 3.1.5. Any other device by which the requirements can be satisfied shall also be permitted.

3.1.5. After the ice has been formed on the windscreen, the vehicle shall be kept in the cold chamber for an additional period of not less than 30 minutes and not more than 40 minutes.

3.1.6. After the period referred to in point 3.1.5. has elapsed, one or two observers shall enter the vehicle, subsequently the vehicle master operation control may be switched to the on position and any engine can be started, if necessary by some external means. The test period shall commence as soon as the vehicle master control switch has been activated.

3.1.6.1. If the vehicle is fitted with an engine, the engine speeds may be adjusted in accordance with the manufacturer's specification recommended for warming up when starting in cold weather, during the first five minutes of the test period.

3.1.6.2. During the final 35 minutes of the test period (or during the entire test period if the five-minute warming-up procedure is not followed) the following shall apply:

3.1.6.2.1. The engine, if fitted, shall run at a speed not exceeding 50 % of the speed corresponding to its maximum power output. However, if this is proven not to be practicable due to specific engine control strategies, for instance in the case of electric hybrid vehicles, a realistic worst case scenario shall be determined. The scenario shall take into account the engine speeds, periodical absence or complete absence of a running engine during normal driving conditions at an ambient temperature of -8ºC or -18ºC, whichever has been selected by the manufacturer as the designated test temperature. If the system can meet the defrosting requirements without a running engine, the engine does not have to run at all.

3.1.6.3. All batteries shall be fully charged at the start of the test. However, high voltage batteries of vehicles with an electric powertrain shall be charged > 60%.

3.1.6.4. During the test, the voltage at the terminals of the defrosting device may be not more than 20% above the nominal rating of the system.

3.1.6.5. The temperature in the test chamber shall be measured at the level of the centre of the windscreen, at a point not significantly affected by heat from the vehicle under test.

3.1.6.6. The horizontal component of the speed of the air cooling the chamber, measured immediately prior to the test, in the median plane of the vehicle at a point 300 mm forward of the base of the windscreen and at a level half-way between the base and the top of the windscreen, shall be as low as possible and in any event less than 8 km/h.

3.1.6.7. If fitted, the engine bonnet, roof, all doors, windows and vents, except the intakes and outlets of the heating and ventilating system, shall be closed; one or two windows may be opened for a total vertical distance of 25 mm if the vehicle manufacturer so requests.

3.1.7.8. The vehicle's defrosting system controls shall be set as recommended by the vehicle manufacturer for the test temperature.

3.1.6.9. The windscreen wipers may be used during the test, but this shall be done without any manual assistance apart from the operation of any controls in the interior of the vehicle.

3.1.7. The observer(s) shall outline the defrosted area on the inside surface of the windscreen, at five-minute intervals from the start of the test period.

3.1.8. On completion of the test, the pattern of the defrosted area outlined on the inner face of the windscreen as required by point 3.1.7. shall be noted and marked to identify windscreen vision areas A and B.

3.2. Windscreen demisting

3.2.1. Before the test, the inside and outer surfaces of the windscreen shall be thoroughly degreased by means of methylated spirit, or an equivalent degreasing agent. After drying, a solution of ammonia of not less than 3% and not more than 10% shall be applied. The surface shall be allowed to dry again and then be wiped with a dry cotton cloth.

3.2.2. The test shall be carried out in an environmental chamber large enough to take the complete vehicle and capable of producing and maintaining a test temperature of -3 ± 1ºC throughout the test period.

3.2.2.1. The temperature in the test chamber shall be measured at the level of the centre of the windscreen, at a point not significantly affected by heat from the vehicle under test.

3.2.2.2. The horizontal component of the speed of the air cooling the chamber, measured immediately prior to the test, in the median plane of the vehicle at a point 300 mm forward of the base of the windscreen and at a level half-way between the base and the top of the windscreen, shall be as low as possible and in any event less than 8 km/h.

3.2.2.3. If fitted, the engine bonnet, roof, all doors, windows and vents, except the intakes and outlets of the heating and ventilation system, shall be closed; one or two windows may be opened from the beginning of the demisting test for a total vertical distance of 25 mm if the vehicle manufacturer so requests.

3.2.3. The mist shall be produced by means of the steam generator described in point 4. The generator shall contain enough water to generate at least 70 ± 5 g/h of steam for each seating position designated by the manufacturer, in an ambient temperature of -3°C.

3.2.4. The inside surface of the windscreen shall be cleaned as set out in point 3.2.1. once the vehicle is placed in the environmental chamber. The ambient air temperature shall then be lowered and stabilized at -3 ± 1°C. The vehicle shall be switched off and shall be kept at the test temperature for not less than 10 hours prior to commencement of the test. If it is possible to check whether the vehicle's engine coolant and lubricant are stabilized at the test temperature, that period may be shortened.

3.2.5. The steam generator shall be placed with its outlets in the median longitudinal plane of the vehicle at a height of 580 ± 80 mm above the R-point or seating reference point of the driver’s seat. It shall normally be placed behind the front seats, however, where the design of the vehicle precludes this, the generator

may be placed in the nearest convenient forward position to that mentioned above.

3.2.6. After the generator has been operating for five minutes inside the vehicle, one or two observers shall quickly enter the vehicle, opening any access doors for a total duration not exceeding 8 seconds, and be seated on the front seating position(s), the output of the generator being then reduced by 70 ± 5 g/h for each observer.

3.2.7. One minute after the observer(s) have entered the vehicle, the vehicle master operation control may be switched to the on position and any engine can be started, if necessary by some external means. The test period shall commence as soon as the vehicle master control switch has been activated.

3.2.7.1. Where the vehicle is fitted with an engine, it shall run at a speed not exceeding 50% of the speed corresponding to its maximum power output. However, if this is proven not to be practicable due to specific engine control strategies, for instance in the case of electric hybrid vehicles, a realistic worst case scenario shall be determined. The scenario shall take into account the engine speeds, periodical absence or complete absence of a running engine during normal driving conditions at an ambient temperature of -1ºC. If the system can meet the demisting requirements without a running engine, the engine does not have to run at all.

3.2.7.2. The vehicle's demisting system controls shall be set as recommended by the vehicle manufacturer for the test temperature.

3.2.7.3. All batteries shall be fully charged at the start of the test. However, high voltage batteries of vehicles with an electric powertrain shall be charged > 60°%.

3.2.7.4. The voltage at the terminals of the demisting device may be not more than 20 % above the nominal rating of the system.

3.2.8. At the end of the test, the demist pattern shall be recorded, noted and marked to identify windscreen vision areas A and B.

4. Characteristics of the steam generator.

4.1. The steam generator used for the test shall have the following general characteristics:

4.1.1. The water container shall have a capacity of at least 2,25 litres.

4.1.2. The heat loss at boiling point shall not exceed 75 W in an ambient temperature of -3 ± 1°C.

4.1.3. The fan shall have a capacity of 0,07 to 0,10 m^3/min at 0,5 mbar static pressure.

4.1.4. Six steam outlet holes shall be positioned at the top of the generator, around the perimeter spaced at equal distances (see Figure 1)

4.1.5. The generator shall be calibrated at -3 ± 1°C to give reading for each 70 ± 5 g/h output up to a maximum of *n* times this figure, where *n* is the maximum number of seating positions designated by the manufacturer.

Figure 1

Diagram of steam generator

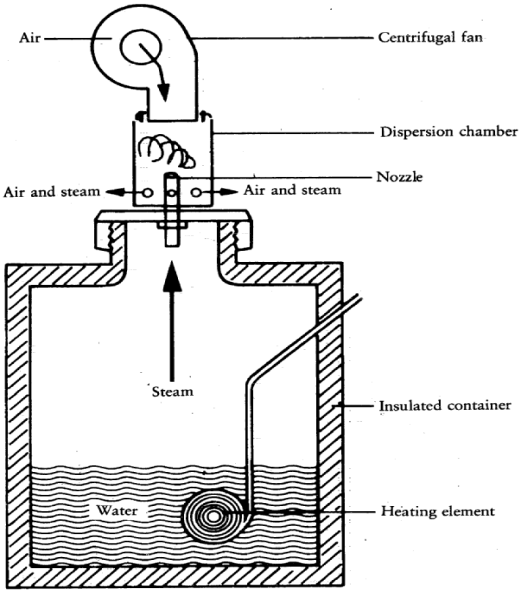

4.2. The specified parts shall have the following dimensional and material characteristics:

4.2.1. Nozzle

4.2.1.1. Dimensions:

4.2.1.1.1. Length 100 mm.

4.2.1.1.2. Inside diameter 15 mm.

4.2.1.2. Material:

4.2.1.2.1. Brass.

4.2.2. Dispersion chamber

4.2.2.1. Dimensions:

4.2.2.1.1. Pipe outside diameter 75 mm.

4.2.2.1.2. Wall thickness 0.38 mm.

4.2.2.1.3. Length 115 mm.

4.2.2.1.4. Six evenly spaced holes of 6.3 mm in diameter, 25 mm above the bottom of the dispersion chamber.

4.2.2.2. Material:

4.2.2.2.1. Brass.

PART 3
EU TYPE-APPROVAL CERTIFICATE (VEHICLE SYSTEM)

Communication concerning *granting* / *extension* / *refusal* / *withdrawal* ([1]) of type-approval of a type of vehicle with regard to the windscreen defrosting and demisting system in accordance with the requirements laid down in Annex VI to Regulation (EU) 2020/… [*Please insert reference to this Regulation*], as last amended by Regulation (EU) No …/…

Number of the EU type-approval certificate:

Reason for *extension* / *refusal* / *withdrawal* ([1]):

SECTION I
[…]
SECTION II
[…]

Addendum
to the EU type-approval certificate number . . .

1. Additional information:

1.1. Brief description of the vehicle type as regards its structure, dimensions, lines and constituent materials:

1.2. Description of the defrosting and demisting systems:

1.3. Description of the interior arrangements or fittings that might affect the tests:

1.4. Maximum number of seating positions:

1.5. Characteristics of the windscreen:
thickness of component parts (mm):

1.6. Rated voltage of the electrical installation (V):

2. Hand of drive: *left* / *right* ([1])

3. Power plant: positive ignition / compression ignition / electric / hybrid electric / [(1)]

4. Defrost test temperature: *-8ºC* / *-18ºC* ([1])

5. Remarks:

ANNEX VII

TOWING DEVICES

PART 1
Information document for EU type-approval of motor vehicles with regard to towing devices

MODEL

Information document No … relating to the EU type-approval of a motor vehicle with regard to towing devices.

The following information shall be supplied in triplicate and include a list of contents. Any drawings or pictures shall be supplied in appropriate scale and in sufficient detail on size A4 or on a folder of A4 format. Photographs, if any, shall show sufficient detail.

0.

0.1.

0.2.

0.2.1.

0.3.

0.3.1.

0.4.

0.5.

0.8.

0.9.

1.

1.1.

2.

2.8.

2.11.5.

12.

12.3.

12.3.1.

12.3.2.

12.3.3.

Explanatory notes

Information document numbering in accordance with the template laid down in Annex I to Commission Implementing Regulation (EU) 2020/683.

PART 2

Technical requirements and test procedure

1. Technical requirements

1.1. Minimum number of devices.

1.1.1. All motor vehicles shall have a towing device fitted at the front.

1.1.2. Vehicles in category M_1, as defined in Part A of Annex I to Regulation (EU) 2018/858, except for those vehicles not suitable for towing any load, shall also be fitted with a towing device at the rear.

1.1.3. A rear towing device may be substituted by a mechanical coupling device, as set out in UN Regulation No 55[2], provided that the requirements in point 1.2.1. are met.

1.2. Load and stability

1.2.1. Each towing device fitted to the vehicle shall be able to withstand a tractive and compressive static force equivalent to the force of gravity acting on at least half the technically permissible maximum laden mass of the vehicle.

2. Test procedure

2.1. Both tractive and compressive test loads shall be applied on each separate towing device fitted to the vehicle.

2.2. The test loads shall be applied in horizontal longitudinal direction, in relation to the vehicle.

[2] Regulation No 55 of the Economic Commission for Europe of the United Nations (UN/ECE) — Uniform provisions concerning the approval of mechanical coupling components of combinations of vehicles (OJ L 153, 15.6.2016, p. 179).

PART 3

EU TYPE-APPROVAL CERTIFICATE (VEHICLE SYSTEM)

Communication concerning *granting* / *extension* / *refusal* / *withdrawal* ([1]) of type-approval of a type of vehicle with regard to the towing devices in accordance with the requirements laid down in Annex VII to Regulation (EU) 2020/… [*Please insert reference to this Regulation*], as last amended by Regulation (EU) No …/…

Number of the EU type-approval certificate:

Reason for *extension* / *refusal* / *withdrawal* ([1]):

SECTION I
[…]
SECTION II
[…]

Addendum
to EU type-approval certificate Number . . .

1. Additional information:

1.1. Brief description of the vehicle type as regards its structure, dimensions, lines and constituent materials:

1.2. Total number and location of towing device(s):

1.3. Method of attachment to the vehicle:

1.4. Technically permissible maximum laden mass of the vehicle (kg):

2. Front towing device(s): *removable* / *not removable* ([1]) *hook* / *eye* / *other* ([1])

3. Rear towing device(s): *removable* / *not removable* ([1]) *hook* / *eye* / *other* / *none* ([1])

4. Vehicle *is* / *is not* ([1]) suitable for towing loads

5. Remarks:

ANNEX VIII

SPRAY SUPPRESSION SYSTEMS

PART 1

Section A

Information document for EU type-approval of vehicles with regard to spray suppression systems

MODEL

Information document No … relating to the EU type-approval of a vehicle with regard to its spray suppression systems.

The following information shall be supplied in triplicate and include a list of contents. Any drawings or pictures shall be supplied in appropriate scale and in sufficient detail on size A4 or on a folder of A4 format. Photographs, if any, shall show sufficient detail.

0.

0.1

0.2.

0.2.1.

0.3.

0.3.1.

0.4.

0.5.

0.8.

0.9

1.

1.1.

1.3.

1.3.1.

1.3.2.

2.

2.1.

2.6.

2.6.1

2.8.

9.

9.20.

9.20.0.

9.20.1.

9.20.2.

9.20.3.

Explanatory notes

Information document numbering in accordance with the template laid down in Annex I to Commission Implementing Regulation (EU) 2020/683.

Section B

Information document for EU type-approval of a type of separate technical unit with regard to spray suppression systems

MODEL

Information document No … relating to the EU separate technical unit type-approval of a spray suppression system.

The following information shall be supplied in triplicate and include a list of contents. Any drawings or pictures shall be supplied in appropriate scale and in sufficient detail on size A4 or on a folder of A4 format. Photographs, if any, shall show sufficient detail.

Where systems, components or separate technical units, referred to in this information document, have electronic controls, information concerning their performance shall be provided.

0.

0.1.

0.2.

0.5.

0.7.

0.8.

0.9

1.

1.1.

1.2.

1.3.

Explanatory notes

Information document numbering in accordance with the template laid down in Annex I to Commission Implementing Regulation (EU) 2020/683.

PART 2

Technical requirements and test procedure

1. For the purposes of this Annex, the following definitions shall apply:

1.1. *'mudguard'* means a rigid or semi-rigid component intended to trap the water thrown up by tyres in motion and to direct it towards the ground and which may entirely or partially form an integral part of the vehicle bodywork or other parts of the vehicle such as the lower part of the load platform;

1.2. *'rain flap'* means a flexible component mounted vertically behind the wheel, on the lower part of the chassis or the loading surface, or on the mudguard and which reduces the risk of small objects, in particular pebbles, being picked up from the ground by the tyres and thrown upwards or sideward towards other road users;

1.3. *'air/water separator'* means a component forming part of the valance and/or of the rain flap through which air can pass whilst reducing pulverized water emissions;

1.4. *'energy absorber'* means a component forming part of the mudguard and/or valance and/ or rain flap which absorbs the energy of water spray, thus reducing pulverized water spray;

1.5. *'outer valance'* means a component located approximately within a vertical plane that is parallel to the longitudinal plane of the vehicle and which may form part of a mudguard or of the vehicle bodywork;

1.6. *'steered wheels'* means the wheels actuated by the vehicle's steering system;

1.7. *'self-tracking axle'* means an axle pivoted about a central point in such a way that it can describe a horizontal arc;

1.8. *'self-steered wheels'* means wheels not actuated by the vehicle's steering device, which may swivel through an angle not exceeding 20° owing to the friction exerted by the ground;

1.9. *'retractable axle'* means an axle as defined in in Annex XIII, Part 2, Section A, point 1.9.;

1.10. *'unladen vehicle'* means a vehicle in running order as stated in in Annex XIII, Part 2, Section A, point 1.3.;

1.11. *'tread'* is the part of the tyre as defined in point 2.8. of UN Regulation No 30[3] or UN Regulation No 54[4] as appropriate;

2. Spray suppression devices

[3] Regulation No 30 of the Economic Commission for Europe of the United Nations (UN/ECE) — Uniform provisions concerning the approval of pneumatic tyres for motor vehicles and their trailers (OJ L 307, 23.11.2011, p. 1).

[4] Regulation No 54 of the Economic Commission for Europe of the United Nations (UN/ECE) — Uniform provisions concerning the approval of pneumatic tyres for commercial vehicles and their trailers (OJ L307, 23.11.2011, p. 2).

2.1. General provision

Spray suppression devices shall be constructed in such a way that they operate properly when used normally on wet roads. Moreover, those devices shall incorporate no structural or manufacturing defect detrimental to their proper functioning or behaviour.

2.2. Test to be carried out

Depending on their physical operating principle, spray suppression devices shall be subjected to the relevant tests as described in points 3.1. and 3.2. and shall deliver the results required in point 5.

2.3. The following shall be submitted to the technical service responsible for conducting the type-approval tests:

Three of the samples shall be used for tests and the fourth shall be kept by the test laboratory for any subsequent verification. The test laboratory may require further samples.

2.4. Markings

Each sample shall be clearly and indelibly marked with the trade name or mark and an indication of the type and include a space that is large enough for the EU component type-approval mark.

2.5. A symbol "A" for devices of the energy-absorption type or a symbol "S" for devices of the air/water separator type shall be added to the approval mark in accordance with Section C in Part 3.

3. Test procedures

Depending on their physical operating principle, spray suppression devices shall subjected to the tests described in Sections 3.1. and 3.2. and shall deliver the results required in those sections (points 3.1.5. and 3.2.5.).

3.1. **Tests on spray suppression devices of the energy-absorber type**

3.1.1. Principle

The aim of this test is to quantify the ability of a device to retain the water directed against it by a series of jets. The test assembly is intended to reproduce the conditions under which the device is to function when fitted to a vehicle as regards the volume and speed of the water thrown up from the ground by the tyre tread.

3.1.2. Equipment

See Figure 8 in the Appendix for a description of the test assembly.

3.1.3. Test conditions

3.1.3.1. The tests shall be carried out in a closed room with a still-air environment.

3.1.3.2. The ambient temperature and the temperature of the test pieces shall be 21 (± 3)°C.

3.1.3.3. De-ionized water shall be used.

3.1.3.4. The test pieces shall be prepared for each test by wetting.

3.1.4. Procedure

3.1.4.1. A 500 (+0/-5) mm wide 750 mm high sample of the equipment to be tested shall be secured to the vertical plate of the testing equipment, making sure that the sample lies well within the limits of the collector, and that no obstacle is able to deflect the water, either before or after its impact.

3.1.4.2. The water flow rate shall be set at 0,675 (+/-0,01) l/s and direct at least 90 l, at most 120 l, on to the sample from a horizontal distance of 500 (+/-2) mm (Figure 8 in the Appendix).

3.1.4.3. The water shall be allowed to trickle from the sample into the collector. The percentage of water collected in relation to the quantity of water sprayed shall be calculated.

3.1.4.4. The test shall be carried out five times on the sample in accordance with points 3.1.4.2. and 3.1.4.3. The average percentage of the series of five tests shall be calculated.

3.1.5. Results

3.1.5.1. The average percentage calculated in point 3.1.4.4. shall be 70 % or higher.

3.1.5.2. Where, within a series of five tests, the highest and lowest percentages of water collected depart from the average percentage by more than 5 %, the series of five tests shall be repeated.

Where, within a second series of five tests, the highest and lowest percentages of water recovered again depart from the average percentage by more than 5 % and if the lower value does not satisfy the requirements of point 3.1.5.1., type-approval shall be refused.

3.1.5.3. It shall be verified whether the vertical position of the device influences the results obtained. Where that is the case, the procedure described in points 3.1.4.1. to 3.1.4.4. shall be repeated in the positions giving the highest and lowest percentage of water collected; the requirements of point 3.1.5.2. shall apply.

The mean of the individual results shall then be taken to give the average percentage. That average percentage shall be 70 or higher.

3.2. Test on spray suppression devices of the air/water separator type

3.2.1. Principle

This test is intended to determine the effectiveness of a porous material intended to retain the water with which it has been sprayed by means of a pressurized air/water pulveriser.

The equipment used for the test shall simulate the conditions to which the material would be submitted, with regard to the volume and speed of the water sprays produced by the tyres, if it were fitted to a vehicle.

3.2.2. Equipment

See Figure 9 in the Appendix for a description of the test assembly.

3.2.3. Test conditions

3.2.3.1. The tests shall be carried out in a closed room with a still-air environment.

3.2.3.2. The ambient temperature and the temperature of the test pieces shall be 21 (± 3)° C.

3.2.3.3. De-ionized water shall be used.

3.2.3.4. The test pieces shall be prepared for each test by wetting.

3.2.4. Procedure

3.2.4.1. A 305 × 100 mm sample shall be secured vertically in the test assembly. It shall be verified that there is no space between the sample and the upper curved plate and that the tray is properly in position. The pulveriser tank shall be filled with 1 ± 0,005 litres of water and placed as described in the diagram.

3.2.4.2. The pulveriser shall be regulated as follows:

(a) pressure (at pulveriser): 5 bar + 10 % / - 0 %

(b) flowrate: 1 litre/minute ± 5 seconds

(c) pulverisation: circular, 50 ± 5 mm in diameter at 200 ± 5 mm from the sample, nozzle 5 ± 0,1 mm in diameter.

3.2.4.3. The water shall be pulverised until there is no more water mist and the time taken shall be noted. The water shall be allowed to flow out of the sample on to the tray for 60 seconds and the volume of water collected shall be measured. The quantity of water left in the pulveriser tank shall be measured. The percentage of the volume of water collected in relation to the volume of water pulverised shall be calculated.

3.2.4.4. The test shall be carried out five times and the average percentage of the quantity collected shall be calculated. It shall be verified before each test that the tray, pulveriser tank and measuring vessel are dry.

3.2.5. Results

3.2.5.1. The average percentage calculated in accordance with point 3.2.4.4. shall be 85 % or higher.

3.2.5.2. Where, within a series of five tests, the highest and lowest percentages of water collected depart from the average percentage by more than 5 %, the series of five tests shall be repeated. Where, within a second series of five tests, the highest and lowest percentages of water recovered again depart from the average percentage by more than 5 %, and where the lower value does not satisfy the requirements of point 3.2.5.1, type-approval shall be refused.

3.2.5.3. Where the vertical position of the device influences the results obtained, the procedure described in points 3.2.4.1 to 3.2.4.4. shall be repeated in the positions giving the highest and lowest percentages of water collected; the requirements of point 3.2.5.2. shall apply.

The requirement of point 3.2.5.1. apply in order to give the results of each test.

4. Requirements for vehicle type-approval with regard to their spray suppression systems

4.1. Category N and O vehicles shall be constructed and/or fitted with spray suppression systems in such a way as to meet the requirements laid down in this Annex. In the case of chassis/cab vehicles, these requirements may only be applied to the wheels covered by the cab.

At the manufacturer's discretion, for vehicles of category N_1, N_2 with a permissible maximum laden mass not exceeding 7,5 tonnes, O_1 and O_2, and off-road vehicles as defined in Appendix 1 to Annex I to Regulation (EU) 2018/858, the requirements of Part 2 of Annex V as set out for vehicle category M_1 may be applied instead of the requirements of this Annex. In case of off-road vehicles, the distance (c) between the lower edges of the wheel guard and the axis of the passing through the centre of rotation of the wheels may exceed $2 \times r$ to enable sufficient space between the wheel guard and the tyre at maximum spring deflection of the wheel. In such a case, the information document shall include all the particulars relevant to wheel guards as laid down in Part 1 of Annex V.

4.2. The requirements of this Annex relating to spray suppression devices, as defined in Article 2(20), are not mandatory for categories N, O_1 and O_2 vehicles with a permissible maximum laden mass not exceeding 7,5 tonnes, chassis/cab vehicles, unbodied vehicles or vehicles on which the presence of spray suppression devices would be incompatible with their use. However, where such devices are fitted to those vehicles, they shall fulfil the requirements set out in this Regulation.

4.3. A vehicle representative of the vehicle type to be approved, fitted with its spray suppression system, shall be submitted to the technical service conducting the approval tests.

General requirements

4.4. Axles

4.4.1. *Retractable* axles

Where a vehicle is fitted with one or more retractable axles, the spray suppression system shall cover all the wheels when the axle is lowered and the wheels in contact with the ground when the axle is raised.

4.4.2. *Self-tracking axles*

For the purpose of this Regulation, a self-tracking axle of the ‘pivot steering’ type is considered to be, and treated as, an axle fitted with steered wheels.

Where a vehicle is fitted with a self-tracking axle, the spray suppression system shall satisfy the conditions applicable to non-steered wheels where mounted on the pivoting

part. Where not mounted on that part it shall satisfy the conditions are applicable to steered wheels.

4.5. **Position of outer valance**

The distance 'c' between the longitudinal plane tangential to the outer tyre wall, apart from any tyre bulge near the ground, and the inner edge of the valance shall not exceed 100 mm (Figures 1a and 1b in the Appendix).

4.6. **State of the vehicle**

When verifying compliance with this Regulation, the vehicle shall be unladen and with the wheels in the straight-ahead position and the tyres shall be inflated to their normal pressure.

In the case of semi-trailers, the loading surfaces shall be horizontal and the tyres shall be inflated to their normal pressure.

4.7. **Spray suppression systems**

4.7.1. The spray suppression system shall meet the specifications set out in point 4.8 or point 4.10.

4.7.2. The spray suppression system for non-steered or self-steered wheels that are covered by the bodywork floor, or by the lower part of the load platform, shall meet either the specifications set out in point 4.8 or point 4.10 or the specifications set out in point 4.9.

Specific requirements

4.8. **Requirements concerning energy-absorption spray suppression systems for axles fitted with steered or self-steering or non-steered wheels**

4.8.1. Mudguards

4.8.1.1. The mudguards shall cover the zone immediately above, ahead and behind the tyre or tyres in the following manner:

(a) in the case of a single or multiple axle, the forward edge (C) shall extend forwards to reach a line O-Z where θ (theta) is no more than 45° above the horizontal.

The rearmost edge (Figure 2 in the Appendix) shall extend downwards in such a way as not to be more than 100 mm above a horizontal line passing through the centre of the wheel;

(b) in the case of multiple axles the angle θ relates only to the foremost axle and the requirement relating to the height of the rearmost edge shall apply only to the rearmost axle;

(c) the mudguard shall possess a total width 'q' (Figure 1a in the Appendix) at least adequate to cover the width of the tyre 'b' or the entire width of two tyres 't' in the case of twin wheels, account being taken of the extremes for the tyre/wheel unit specified by the manufacturer. Dimensions 'b' and 't' shall be measured at hub height, excluding any markings, ribs, protective bands, etc.,

on the tyre walls.

4.8.1.2. The front side of the rear part of the mudguard shall be fitted with a spray-reduction device complying with the specifications set out in point 3.1. This material shall cover the inside of the mudguard up to a height determined by a straight line running from the centre of the wheel and forming an angle of at least 30° with the horizontal (Figure 3 in the Appendix).

4.8.1.3. Where the mudguards are made up of several components, when fitted, they shall not incorporate any aperture enabling spray to exit while the vehicle is in motion. That requirement shall be deemed to be met where (the vehicle being either laden or unladen) any radial jet running outwards from the wheel centre over the entire width of the tyre running surface and within the range covered by the mudguard always strikes against a part of the spray suppression system.

4.8.2. Outer Valances

4.8.2.1. In the case of single axles, the lower edge of the outer valance may not be situated beyond the following distances and radii, as measured from the centre of the wheel, except at the lowest extremities, which may be rounded (Figure 2 in the Appendix).

Air suspension: (a) Axles fitted with steered wheels or self-steering wheels: From the front edge (towards the front of the vehicle) (tip C) To the rear edge (towards the rear of the vehicle) (tip A)	$R_v \leq 1{,}5\ R$
(b) Axles fitted with non-steered wheels: From the front edge (tip C) To the rear edge (tip A)	$R_v \leq 1{,}25\ R$

Mechanical suspension

(a) general case } $Rv \leq 1{,}8\ R$

(b) non-steered wheels for vehicles with a technically permissible laden mass more than 7.5 t } $Rv \leq 1{,}5\ R$

where R is the radius of the tyre fitted to the vehicle, and Rv the distance, expressed as a radius, at which the lower edge of the outer valence is situated.

4.8.2.2. In the case of multiple axles the requirements laid down in point 4.8.2.1. shall not apply between the vertical transversal planes passing through the centre of the first and the last axles where the outer valance may be straight in order to ensure the continuity of the spray suppression system. (Figure 4 in the Appendix).

4.8.2.3. The distance between the uppermost and the lowermost points of the spray suppression system (mudguard and outer valance) measured in any cross section

perpendicular to the mudguard (see Figures 1b and 2 in the Appendix) shall extend to not less than 45 mm at all points behind a vertical line passing through the centre of the wheel or the first wheel in the case of multiple axles. This dimension may be gradually reduced in front of that vertical line.

4.8.2.4. Openings enabling spray to emerge when the vehicle is moving shall not be allowed in the outer valances or between the outer valances and the other parts of the mudguards.

4.8.2.5. The requirements of points 4.8.2.3 and 4.8.2.4 may not be respected locally when the valance is composed by different elements with relative movement.

4.8.2.6. Tractors for semi-trailers with a low chassis, namely those which may have a height of coupling face (defined in point 6.20 of standard ISO 612:1978) equal to or less than 1100 mm, may be designed in such a way as to be exempted from the requirements of points 4.8.1.1 (a), 4.8.1.3 and 4.8.2.4. In that regard, mudguards and valances shall not cover the area immediately above the tyres of the rear axles, where those tractors are coupled to a semi-trailer, in order to avoid the spray suppression system being destroyed. However, the mudguards and valances of those vehicles shall fulfill the requirements of points 4.8.1.1 (a), 4.8.1.3 and 4.8.2.4., in sectors more than 60° from the vertical line passing through the centre of the wheel, in front and behind these tyres.

The vehicles referred to in the first paragraph shall therefore be designed in such a way as to meet the requirements set out in that first paragraph when they are operated without a semi-trailer.

In order to be able to meet the requirements set out in the first paragraph, mudguards and valances may comprise a removable part.

4.8.3. Rain Flaps

4.8.3.1. The width of the flap shall fulfil the requirement for ‘q’ in point 4.8.1.1 (c), except for any part of the flap that is contained within the mudguards. In such cases this part of the flap shall be at least equal in width to the tread of the tyre.

The width of the part of the rain flaps positioned beneath the mudguard shall satisfy the condition laid down in the first paragraph with a tolerance of ± 10 mm at each side.

4.8.3.2. The orientation of the flap shall be basically vertical.

4.8.3.3. The maximum height of the bottom edge shall not exceed 200 mm (Figure 3 in the Appendix).

That distance shall be increased to 300 mm for the last axle where the radial distance of the lower edge of the outer valancing, Rv, does not exceed the dimensions of the radius of the tyres fitted to the wheels on that axle.

The maximum height of the bottom edge of the rain flap in relation to the ground, may be raised to 300 mm where the manufacturer deems it technically appropriate with regard to the suspension characteristics.

4.8.3.4. The rain flap shall not be more than 300 mm from the rearmost edge of the tyre, measured horizontally.

4.8.3.5. For multiple axles where distance ‘d’ between the tyres on adjacent axles is less than 250 mm, only the rear set of wheels shall be fitted with rain flaps. There shall be a rain flap behind each wheel when distance ‘d’ between the tyres on adjacent axles is at least 250 mm (Figure 4 in the Appendix).

4.8.3.6. Rain flaps shall not be deflected by more than 100 mm towards the rear under a force of 3 N per 100 mm of flap width, applied to a point located 50 mm above the lower edge of the flaps.

4.8.3.7. The whole of the front face of the part of the rain flap having the minimum dimensions required shall be fitted with a spray suppression device that meets the specifications set out in point 3.1.

4.8.3.8. Openings enabling spray to emerge shall not be allowed between the lower rear edge of the mudguard and the rain flaps.

4.8.3.9. Where the spray suppression device meets the specifications relating to rain flaps set out in point 4.8.3, no additional rain flap shall be required.

4.9. **Requirements relating to spray suppression systems fitted with energy-absorption spray suppression devices for certain axles that are fitted with non-steered or self-steering wheels (see point 5.2.)**

4.9.1. Mudguards

4.9.1.1. Mudguards shall cover the zone immediately above the tyre or tyres. Their front and rear extremities shall extend to at least the horizontal plane that is tangent to the upper edge of the tyre or tyres (Figure 5 in the Appendix). However, the rear extremity may be replaced by the rain flap, in which case the rain flap shall extend to the upper part of the mudguard (or equivalent component).

4.9.1.2. All of the inner rear part of the mudguard shall be fitted with a spray suppression device that meets the requirements set out in point 3.1.

4.9.2. Outer Valances

4.9.2.1. For single or multiple axles where the distance between the adjacent tyres is at least 250 mm, the outer valance shall cover the surface extending from the lower to the upper part of the mudguard up to a straight line formed by the tangent to the upper edge of the tyre or tyres and lying between the vertical plane formed by the tangent to the front of the tyre and the mudguard or rain flap located behind the wheel or wheels (Figure 5b in the Appendix).
For multiple axles an outer valance shall be located by each wheel.

4.9.2.2. Openings enabling spray to emerge shall not be allowed between the outer valance and the inner part of the mudguard.

4.9.2.3. Where rain flaps are not fitted behind each wheel (see point 4.8.3.5.), the outer valance shall be unbroken between the outer edge of the rain flap to the vertical plane that is tangent to the point furthest to the front of the tyre (Figure 5a in the Appendix) of the first axle.

4.9.2.4. The entire inner surface of the outer valance, the height of which shall not be less than 100 mm, shall be fitted with an energy-absorption spray suppression device complying with the requirements of Section 3.1.

4.9.3. Those flaps shall extend to the lower part of the mudguard and comply with points 4.8.3.1. to 4.8.3.9.

4.10 **Requirements concerning spray suppression systems fitted with air/water separator spray suppression devices for axles with steered and non-steered wheels**

4.10.1. Mudguards

4.10.1.1. Mudguards shall comply with the requirements of point 4.8.1.1 (c).

4.10.1.2. Mudguards for single or multiple axles where the distance between the tyres on adjacent axles exceeds 300 mm shall, in addition, comply with point 4.8.1.1 (a).

4.10.1.3. For multiple axles where the distance between the tyres on adjacent axles does not exceed 300 mm the mudguards shall, in addition, comply with the model shown in Figure 7.

4.10.2. Outer Valances

4.10.2.1. The lower edges of the outer valances shall be fitted with air/water separator spray suppression devices complying with the requirements set out in this Annex.

4.10.2.2. For single or multiple axles where the distance between the tyres on adjacent axles exceeds 300 mm, the lower edge of the spray suppression device fitted to the outer valance shall have the following maximum dimensions and radii, starting from the centre of the wheel (Figures 6 and 7 in the Appendix):

- (a) Axles fitted with steered wheels or self-steering wheels: from the front edge (towards the front of the vehicle) (tip C at 30°) to the rear edge (towards the rear of the vehicle) (tip A at 100mm)

(a) Axles fitted with steered wheels or self-steering wheels: from the front edge (towards the front of the vehicle) (tip C at 30°) to the rear edge (towards the rear of the vehicle) (tip A at 100mm)

- (b) Axles fitted with non-steered wheels from the front edge (tip C at 20°) to the rear edge (tip A at 100mm)

(b) Axles fitted with non-steered wheels: from the front edge (tip C at 20°) to the rear edge (tip A at 100mm)

$R_v \leq 1{,}05\ R$

$R_v \leq 1{,}00\ R$

where R = is the radius of tyre fitted to the vehicle;

R_v = the radial distance from the lowest edge of the outer valance to the centre of the wheel.

where R = is the radius of tyre fitted to the vehicle;

R_v = the radial distance from the lowest edge of the outer valance to the centre of the wheel.

4.10.2.3. For multiple axles where the distance between the tyres on adjacent axles does not exceed 300 mm, the outer valances located in the inter-axle spaces shall follow the path specified in point 8.1.3, and shall extend downwards in such a way as to be not more than 100 mm above a horizontal straight line passing through the wheel centres (Figure 7 in the Appendix).

4.10.2.4. The depth of the outer valance shall extend to not less than 45 mm, at all points behind a vertical line passing through the centre of the wheel. That depth may be gradually reduced in front of that vertical line.

4.10.2.5. Openings enabling spray to emerge shall not be allowed in the outer valances or between the outer valances and the mudguards.

4.10.3. Rain Flaps

4.10.3.1. Rain flaps shall comply with either of the following sets of requirements:

(a) point 4.8.3. (Figure 3 in the Appendix);

(b) points 4.8.3.1., 4.8.3.2., 4.8.3.5., 4.8.3.8 and 4.10.3.2 (Figure 6 in the Appendix).

4.10.3.2. Spray suppression equipment complying with the specifications set out in point 4 of the Appendix, shall be fitted to the rain flaps referred to in point 4.10.3.1 (b), at least along the full edge.

4.10.3.2.1. The lower edge of the spray suppression device shall be not more than 200 mm from the ground. The maximum height of the bottom edge of the rain flap in relation to the ground may be raised to 300 mm where the manufacturer deems it technically appropriate with regard to the suspension characteristics.

4.10.3.2.2. The spray suppression device shall be at least 100 mm deep.

4.10.3.2.3. Apart from the lower part, which includes the spray suppression device, the rain flap as referred to in point 4.10.3.1(b) shall not bend by more than 100 mm towards the rear under the effect of a force of 3 N per 100 mm of width of the rain flap measured at the intersection of the rain flap with the spray suppression device in its working position, applied at a distance of 50 mm above the lower edge of the rain flap.

4.10.3.3. The rain flap shall not be more than 200 mm from the rearmost edge of the tyre, measured horizontally.

4.11. For multiple axles, it is not necessary that the spray suppression system of one axle, which shall not be the furthest back, covers the entire width of the tread of the tyre when there is, locally, the possibility of interference between the spray suppression system and the structure of the axles or of the suspension or of the undercarriage.

Appendix
Figures

Figure 1a
Width (q) of mudguard (a) and position of valance (j)

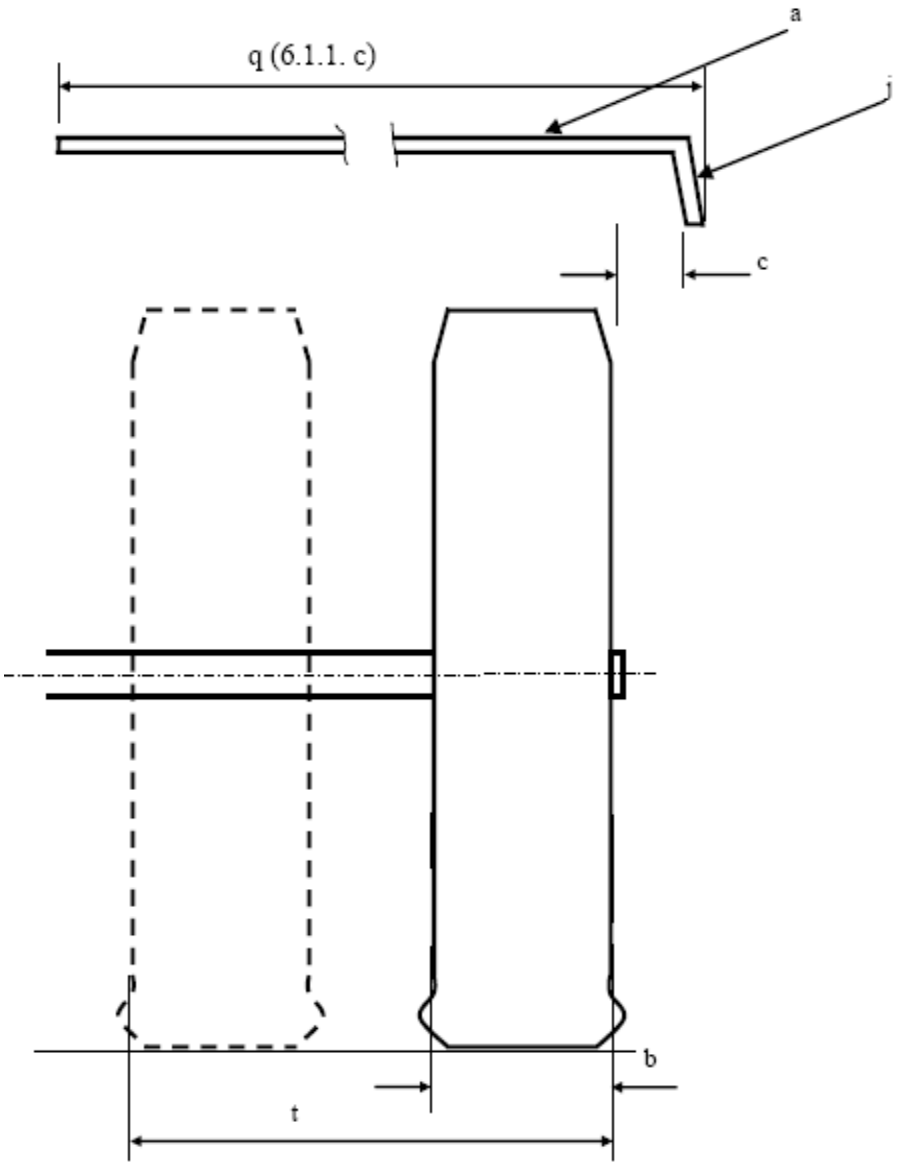

Note : The figures refer to the corresponding point 4.8.1.1 (c) of Part 2 of this Annex.

Figure 1b
Example of measurement of the outer valance

Figure 2

Dimensions of mudguard and outer valance

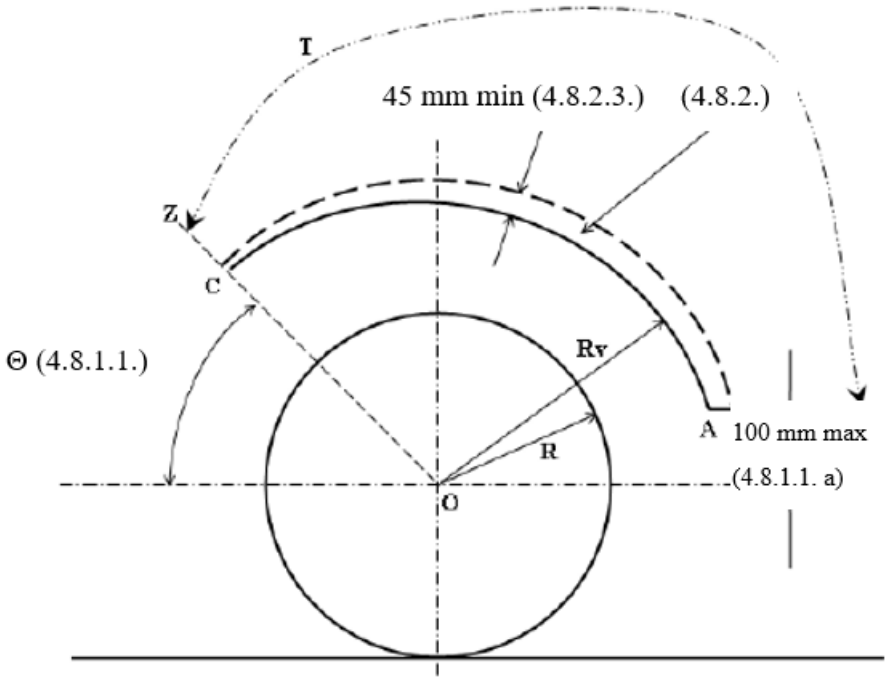

Note:

1. The figures quoted relate to points 4.8.2, 4.8.2.3, 4.8.1.1 and 4.8.1.1(a) of Part 2 of this Annex.

2. T: extent of mudguard.

Figure 3

Position of mudguard and rain flap

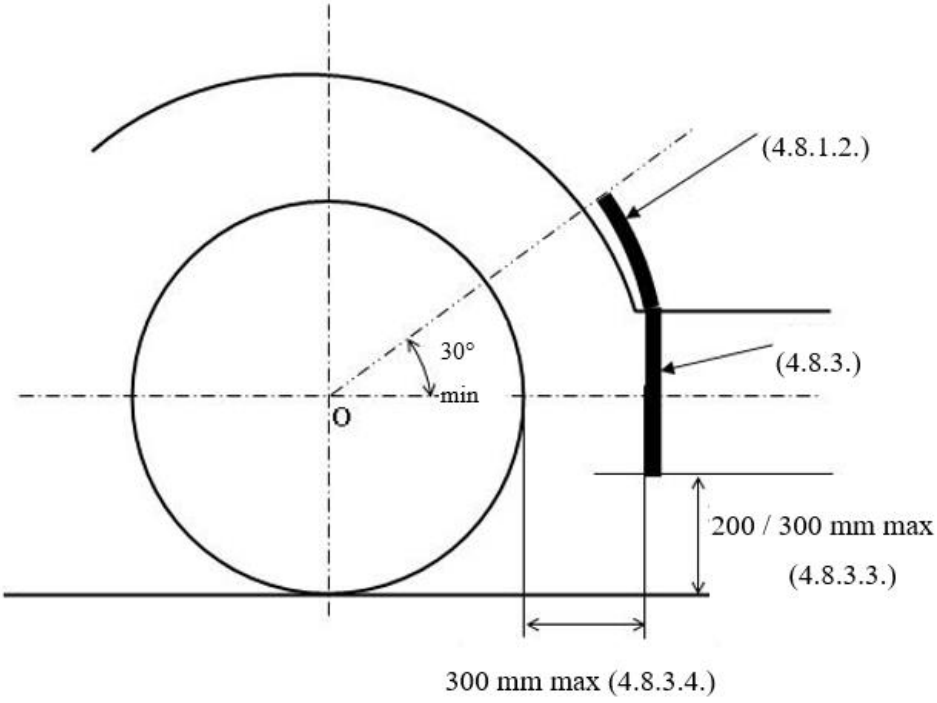

Note: The figures quoted relate to points 4.8.1.2, 4.8.3 and 4.8.3.3 of Part 2 of this Annex

Figure 4

Diagram showing assembly of a spray suppression system (mudguard, rain flap, outer valance) incorporating spray suppression devices (energy absorbers) for multiple axles

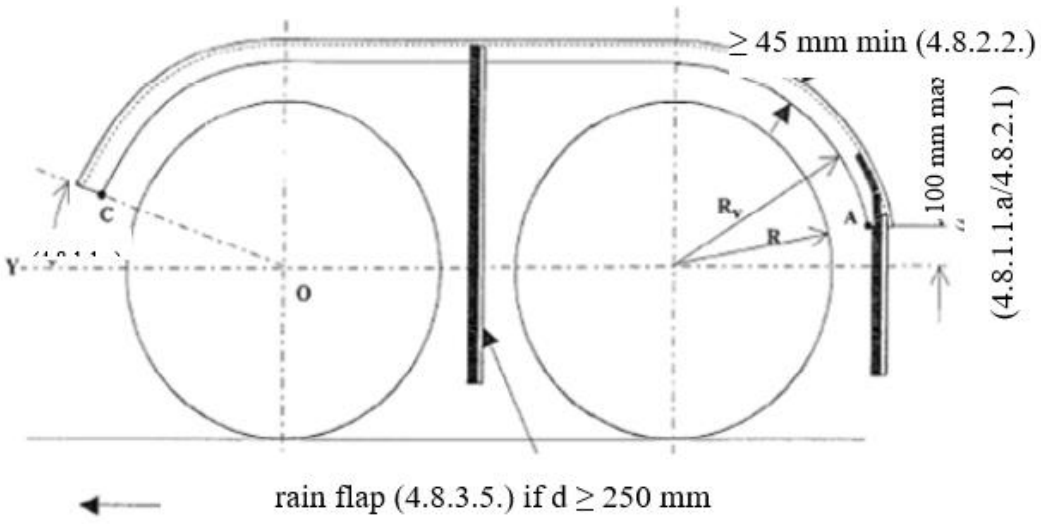

Figure 5

Diagram showing the assembly of a spray suppression system incorporating spray suppression devices (energy absorbers) for axles fitted with non-steered or self-steering wheels

(Points 4.7.2. and 4.9. of Part 2 of this Annex)

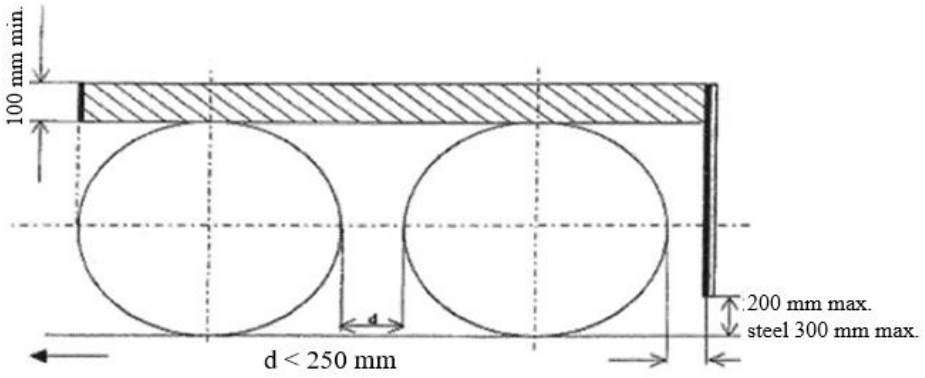

(a) Multiple axles where the distance between the tyres is less than 250 mm

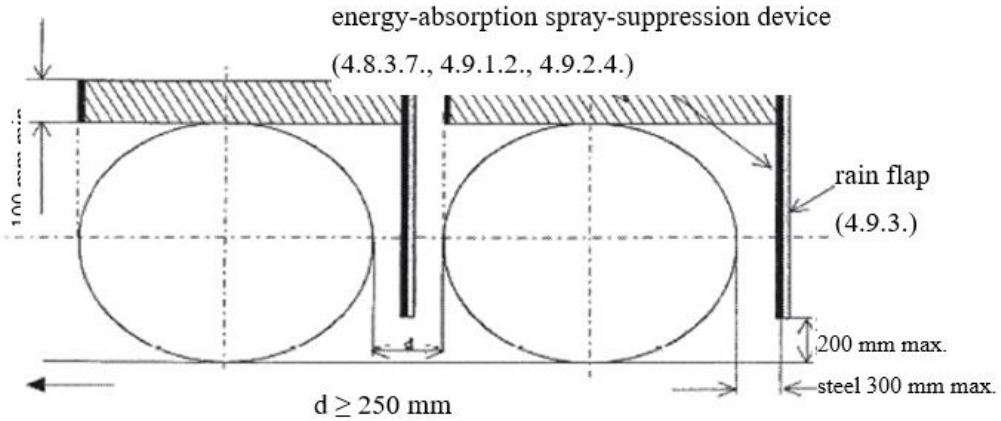

(b) Single axles or multiple axles where the distance between the tyres is not less than 250 mm

Figure 6

Diagram showing the assembly of a spray suppression system incorporating spray suppression devices fitted with air/water separators for axles fitted with steered, self-steering or non-steered wheels

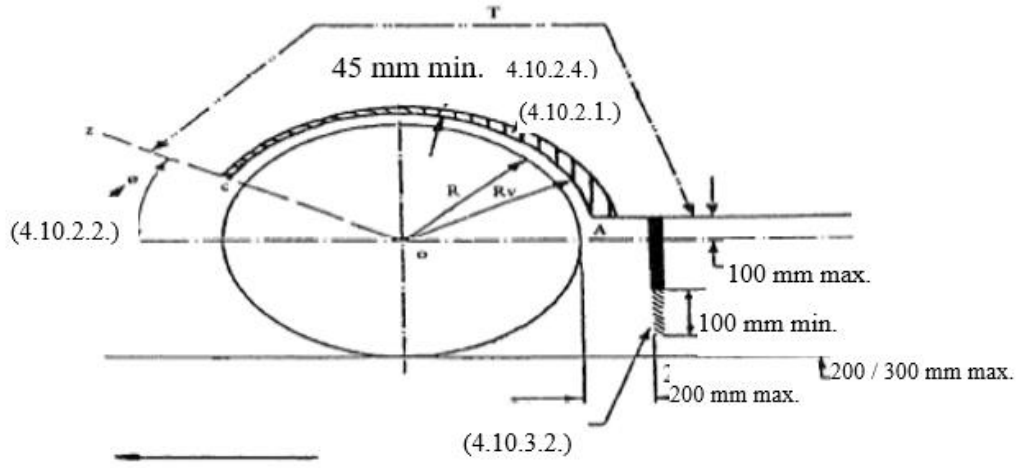

Note:

1. The figures relate to the corresponding points of Part 2 of this Annex.

2. T: extent of mudguard

Figure 7

Diagram showing assembly of a spray suppression system incorporating spray suppression devices (mudguard, rain flap, outer valance) for multiple axles where the distance between the tyres does not exceed 300 mm

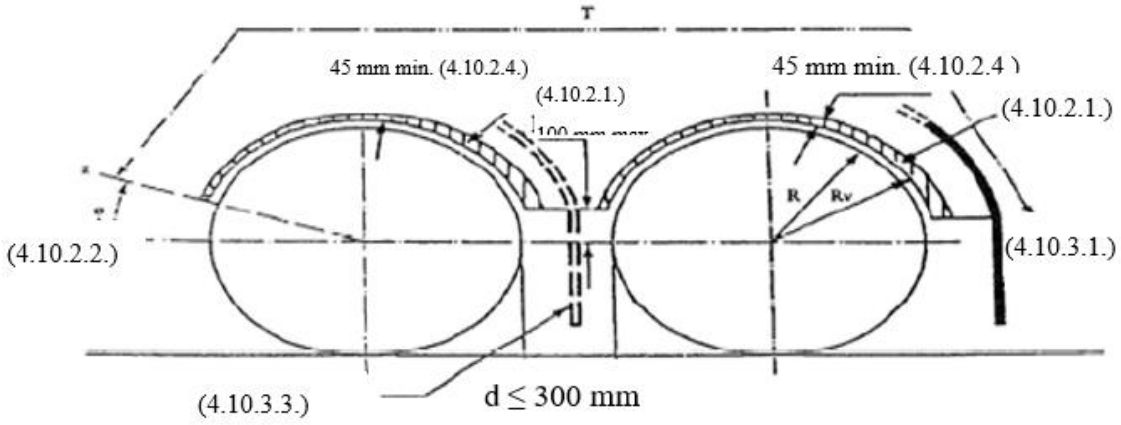

d ≥ 250 mm; rain flap required

Note:

1. The figures relate to the corresponding points of Part 2 of this Annex.

2. T: extent of mudguard

Figure 8

Test assembly for energy absorption spray suppression devices

(point 3.1.2. of Part 2 of this Annex)

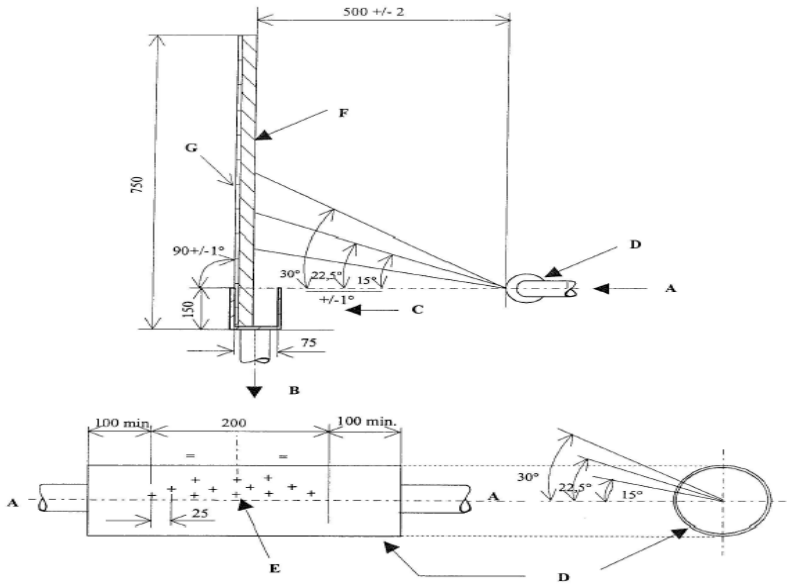

Note:

A = water supply from pump

B = flow towards collector tank

C = collector with inside dimension of 500 (+5/-0) mm length and 75 (+2/-0) mm width

D = stainless steel pipe, external diameter 54 mm, wall thickness 1,2 (+/- 0,12) mm, inside and outside surface roughness Ra between 0,4 and 0,8 µm

E = 12 cylindrical radially drilled holes with burr-free square edges. Their diameter, measured on the inside and on the outside of the tube, is 1,68 (+0,010/-0) mm

F = 500 (+0/-5) mm-wide sample to be tested

G = rigid flat plate

All linear dimensions are shown in millimetres.

Figure 9

Test assembly for air/water separator spray suppression devices

(point 3.2.2. of Part 2 of this Annex)

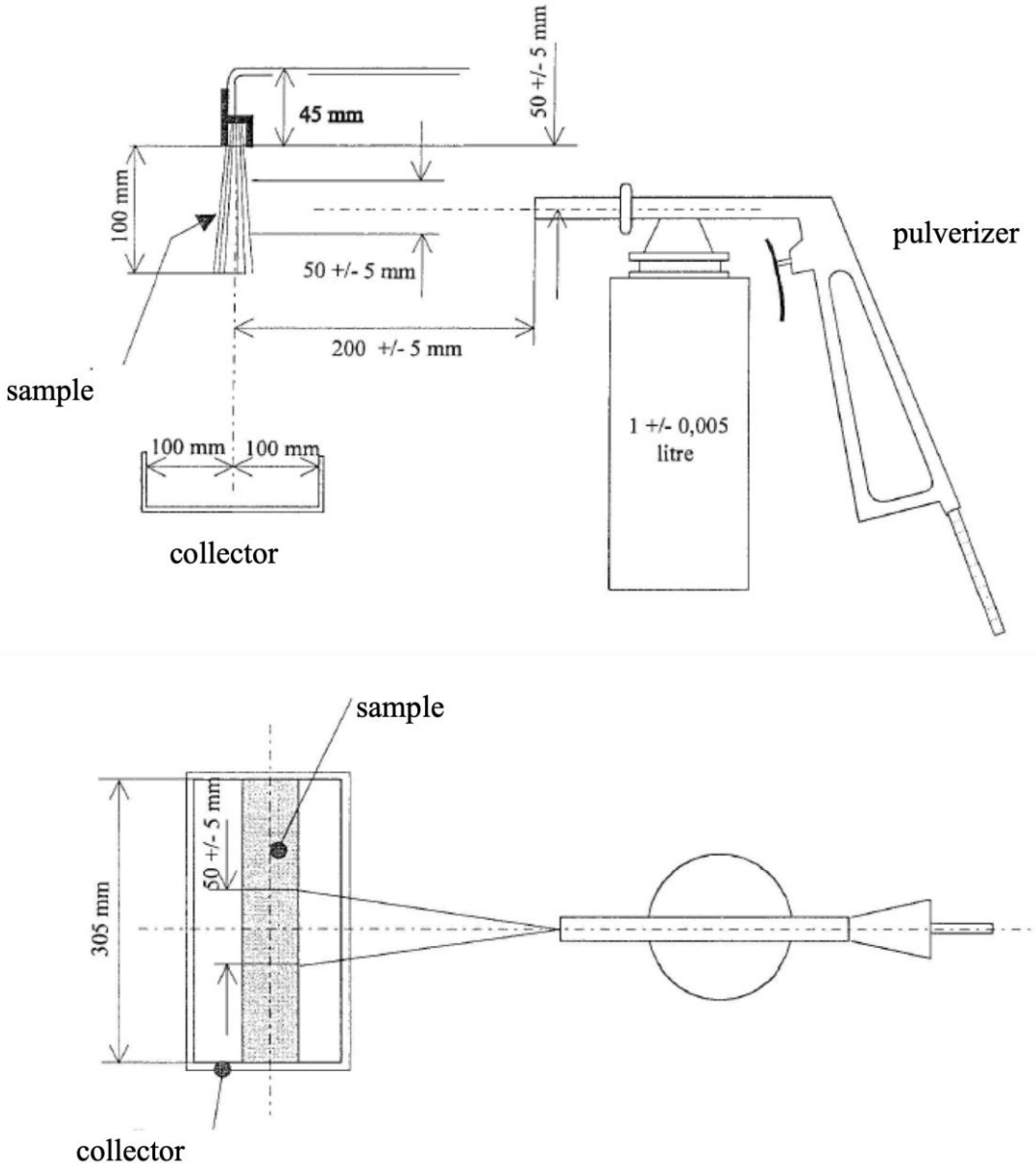

PART 3

Section A

EU TYPE-APPROVAL CERTIFICATE (VEHICLE SYSTEM)

Communication concerning *granting* / *extension* / *refusal* / *withdrawal* ([1]) of type-approval of a type of vehicle with regard to the spray suppression system in accordance with the requirements laid down in Annex VIII to Regulation (EU) 2020/… [*Please insert reference to this Regulation*], as last amended by Regulation (EU) No …/…

Number of the EU type-approval certificate:

Reason for *extension* / *refusal* / *withdrawal* ([1]):

SECTION I
[…]
SECTION II
[…]

Addendum
to EU type-approval certificate number …

1. Additional information

1.1. Characteristics of the spray suppression devices (type, brief description, trade mark or name, component type-approval number(s):

5. Remarks (if any):

Section B

EU TYPE-APPROVAL CERTIFICATE (SEPARATE TECHNICAL UNIT)

Communication concerning *granting* / *extension* / *refusal* / *withdrawal* ([1]) of type-approval of a type of STU with regard to the spray suppression systems in accordance with the requirements laid down in Annex VIII to Regulation (EU) 2020/… [*Please insert reference to this Regulation*], as last amended by Regulation (EU) No …/…

Number of the EU type-approval certificate:

Reason for *extension* / *refusal* / *withdrawal* ([1]):

SECTION I
[…]
SECTION II
[…]
Addendum
to EU type-approval certificate number ...

1. Additional information

1.1. Operating principle of device: *energy-absorption* / *air* / *water separator* [(1)]:

1.2. Characteristics of spray suppression devices (brief description, trademark or name, number(s):

5. Remarks (if any):

[(1)] Delete where not applicable.

Section C

EU type-approval mark of separate technical units as regards spray suppression systems

1. The EU type-approval mark for separate technical units referred to in Article 38(2) of Regulation (EU) 2018/858 shall consist of the following:

1.1. A rectangle surrounding the lower-case letter ‘e’, followed by the distinguishing number of the Member State which has granted the EU type-approval for the component or separate technical unit in accordance with the following:

1	for Germany	19	for Romania
2	for France	20	for Poland
3	for Italy	21	for Portugal
4	for The Netherlands	23	for Greece
5	for Sweden	24	for Ireland
6	for Belgium	26	for Slovenia
7	for Hungary	27	for Slovakia
8	for the Czech Republic	29	for Estonia
9	for Spain	32	for Latvia
12	for Austria	34	for Bulgaria
13	for Luxembourg	36	for Lithuania
17	for Finland	49	for Cyprus
18	for Denmark	50	for Malta

1.2. In the vicinity of the rectangle, two digits indicating the series of amendments laying down the requirements with which this separate technical units complies, “00” at present, followed by a space and the five-digit number referred to in point 2.4 of Annex IV of Regulation (EU) 2018/858.

2. The EU separate technical unit type-approval mark shall be affixed to the spray suppression device in such a way as to be indelible as well as clearly and easily legible even if the device is fitted to a vehicle.

3. An example of an EU separate technical unit type-approval mark is shown in Figure 1.

Figure 1

Example of EU separate technical unit type-approval mark

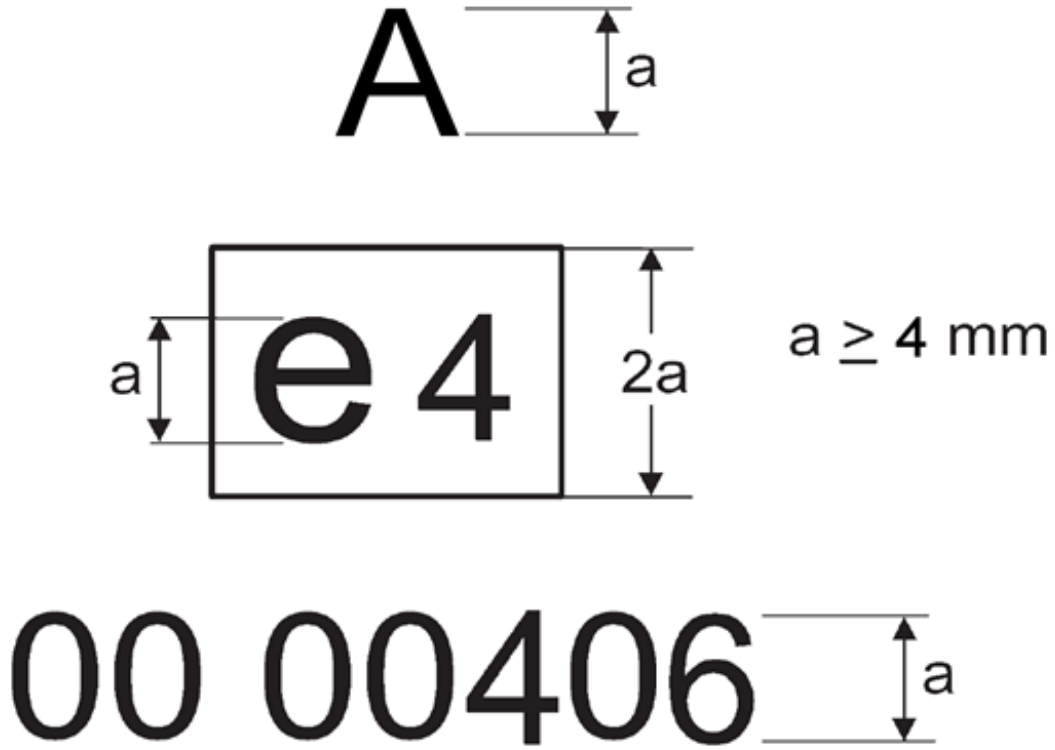

Explanatory note

Legend The EU separate technical unit type-approval was issued by The Netherlands under number 00406. The first two digits "00" indicate that the separate technical unit was approved in accordance with this Regulation. The symbol "A" indicates it is a device of the energy-absorption type.