DEAS 1017-3:2019

ICS 91.140.70

# EAST AFRICAN STANDARD

## Sanitary appliances (Vitreous china) — Specification — Part 3: Wash basins

# EAST AFRICAN COMMUNITY

© EAC 2019

First Edition 2019

**Copyright notice**

This EAC document is copyright-protected by EAC. While the reproduction of this document by participants in the EAC standards development process is permitted without prior permission from EAC, neither this document nor any extract from it may be reproduced, stored or transmitted in any form for any other purpose without prior written permission from EAC.

Requests for permission to reproduce this document for the purpose of selling it should be addressed as shown below or to EAC's member body in the country of the requester:

*© East African Community 2019 — All rights reserved*
*East African Community*
*P.O. Box 1096,*
*Arusha*
*Tanzania*
*Tel: + 255 27 2162100*
*Fax: + 255 27 2162190*
*E-mail: eac@eachq.org*
*Web: www.eac-quality.net*

Reproduction for sales purposes may be subject to royalty payments or a licensing agreement. Violators may be prosecuted.


© EAC 2019 – All rights reserved

# Contents

Page

**Foreword** ..... iv

**1 Scope** ..... 1

**2 Normative references** ..... 1

**3 Terms and definitions** ..... 1

**4 General requirements** ..... 1

**5 Patterns and sizes** ..... 1

**6 Dimensions and tolerances** ..... 2
**6.1 Functional dimensions** ..... 2
**6.2 Connecting dimensions** ..... 3
**6.3 Tolerances** ..... 7

**7 Construction** ..... 7
**7.1 Soap holders** ..... 7
**7.2 Tap holes** ..... 8
**7.3 Waste hole** ..... 8
**7.4 Fixing arrangements** ..... 8
**7.4.1 Bracket stud** ..... 8
**7.4.2 Screw fixing** ..... 8
**7.4.5 Rag bolt** ..... 8
**7.5 Overflow** ..... 8
**7.6 Soap recess(es)** ..... 8
**7.7 Load bearing test** ..... 8
**7.8 Chain stay hole** ..... 9
**7.9 Pedestal** ..... 9

**8 Finish** ..... 9

**9 Sampling, inspection and methods of test** ..... 9
**9.1 Sampling and inspection** ..... 9
**9.2 Methods of test** ..... 9

**10 Marking** ..... 10

**Bibliography** ..... 11

© EAC 2019 – All rights reserved 

# Foreword

Development of the East African Standards has been necessitated by the need for harmonizing requirements governing quality of products and services in the East African Community. It is envisaged that through harmonized standardization, trade barriers that are encountered when goods and services are exchanged within the Community will be removed.

The Community has established an East African Standards Committee (EASC) mandated to develop and issue East African Standards (EAS). The Committee is composed of representatives of the National Standards Bodies in Partner States, together with the representatives from the public and private sector organizations in the community.

East African Standards are developed through Technical Committees that are representative of key stakeholders including government, academia, consumer groups, private sector and other interested parties. Draft East African Standards are circulated to stakeholders through the National Standards Bodies in the Partner States. The comments received are discussed and incorporated before finalization of standards, in accordance with the Principles and procedures for development of East African Standards. XXXXXX.

East African Standards are subject to review, to keep pace with technological advances. Users of the East African Standards are therefore expected to ensure that they always have the latest versions of the standards they are implementing.

The committee responsible for this document is Technical Committee EASC/TC 037, Utensils, cutlery, Sanitary wares and fittings and domestic hardware.

Attention is drawn to the possibility that some of the elements of this document may be subject of patent rights. EAC shall not be held responsible for identifying any or all such patent rights.


© EAC 2019 – All rights reserved

# Sanitary appliances (vitreous china) — Specifications — Part 3: Wash basins

## 1 Scope

This Draft East African standard covers the requirements, patterns and sizes, dimensions and tolerances, construction, finish, sampling and marking provisions for vitreous washbasins.

## 2 Normative references

The following documents are referred to in the text in such a way that some or all of their content constitutes requirements of this document. For dated references, only the edition cited applies. For undated references, the latest edition of the referenced document (including any amendments) applies.

DEAS 1017-1:2019, *Vitreous sanitary appliances — Part 1: General requirements*

DEAS 1017-2:2019, *Sanitary appliances (Vitreous china) — Specifications — Part 2: Wash down water closets*

## 3 Terms and definitions

For the purposes of this document, the terms and definitions given in DEAS 1017-1:2019.

ISO and IEC maintain terminological databases for use in standardization at the following addresses:

— ISO Online browsing platform: available at http://www.iso.org/obp

## 4 General requirements

The general requirements relating to terminology, materials, manufacture, glazing, defects, minimum thickness, tolerances, performance and methods of tests shall conform to DEAS 1017-1:2019.

## 5 Patterns and sizes

**5.1** The patterns and sizes of washbasins shall conform to Table 1.

**Table 1 — Patterns and corresponding sizes of wash basins**

| Pattern | Size<br>mm |
|---|---|
| Flat back | 660 x 460 (Surgeon's basin) |
| | 630 x 450 |
| | 550 x 400 |
| | 450x 300 |
| Angle back | 600 x 480 |
| | 400 x 400 |

© EAC 2019 – All rights reserved

**5.2** Wash basins may be made in other patterns and sizes where so agreed to between the manufacturer and the purchaser. However, except for functional dimensions all other requirements as laid down in this standard shall be complied with.

## 6 Dimensions and tolerances

### 6.1 Functional dimensions

The functional dimensions of washbasins shall conform to those given in Table 2 read with figures 1A and 1B. 1B.

**Table 2 — Functional dimensions of washbasins**

| Pattern | Size<br>mm | Length, A<br>mm | Breadth, B<br>mm | Height, C<br>mm |
|---|---|---|---|---|
| Flat back | 660 x 460 (Surgeon's basin) | 660 | 460 | 200, min |
| | 630 x 450 | 630 | 450 | 290, max |
| | 550 x 400 | 550 | 400 | 290, max |
| | 450x 300 | 450 | 300 | 225, max |
| Angle back | 600 x 480 | 600 | 480 | 290, max |
| | 400 x 400 | 400 | 400 | 290, max |

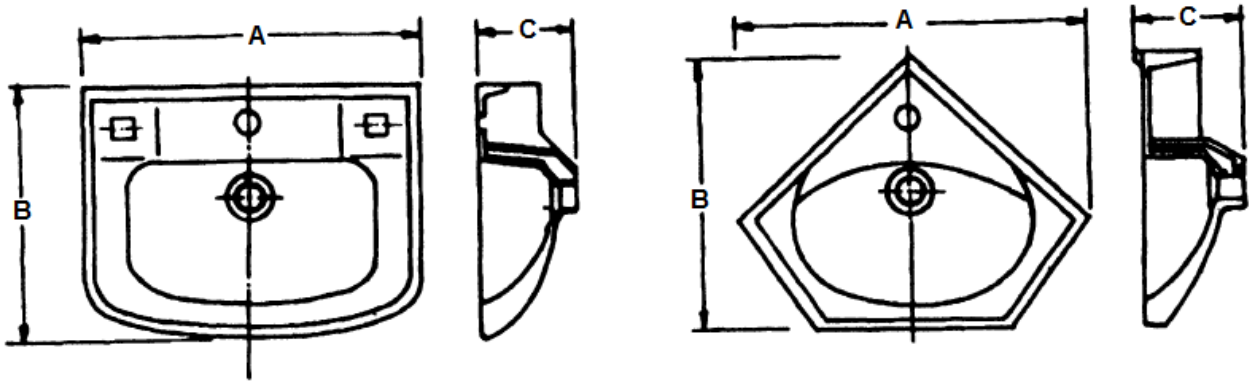


1A FLAT BACK

1B ANGLE BACK

**Figure 1 — Functional dimensions of washbasin — Typical sketches**


© EAC 2019 – All rights reserved

## 6.2 Connecting dimensions

**6.2.1** The connecting dimensions are critical for plumbing applications and these shall be strictly complied with irrespective of the pattern and design.

**6.2.2** Connecting dimensions for washbasins with five, three and two tap hole set shall conform to Table 3 read with Figures 2 and 3.

**Table 3 — Connecting dimensions for washbasin with five, three and two tap hole set**

| Description | Reference in figures 2&3 | Dimensions mm |
|---|---|---|
| Diameter of outer tap holes | $d_1$ | $30^{+2}_{-0}$ |
| Diameter of central tap hole | $d_2$ | $35^{+2}_{-1}$ |
| Distance from vertical planes passing through the centre line of the central tap hole and the centre line of the outer (adjacent) tap holes | e | ≤15 |
| Distance between the centre lines of the two outer (distant) tap holes<br>a) For size 630x450<br>b) For size 550x400 | $f_1$<br>For size 630x450 | 480 |
| | $f_1$<br>For size 550x400 | 400 |
| Distance between the centre lines of the two adjacent outer tap holes | $f_2$ | 200±4 |
| Horizontal distance between centre line of the central tap hole and the edge of the bowl | $g_1$ | 80, max. |
| Horizontal distance between centre line of a distant hole and the edge of the bowl | $g_2$, $g_3$ | 65, max |
| a) Distance from wall or inside of skirting (where provided) and centre line of central tap hole<br>b) Distance from wall (where skirting is not provided) and centre of tap hole | $g_4$ | 32, min. |
| | $g_4$ | 40, min |
| Radius of a cylinder with the same axis as the fitting hole which permits the following free space below the inside edge of the tap fitting hole<br>a) Of 0 to 5 mm height<br>b) Of 5 mm and more height | r | 25, min. |
| | $r_1$ | 30, min. |
| Wall thickness in the zone of the tap fitting hole | s | 18, max. |
| Horizontal distance between the axis of the central tap hole to the axis of the waste outlet opening | t | 170, max. |
| 1) Dimension't' is not applicable for angle backwash basin and 450 mm x 300 mm wash basin.<br>2) Dimension $f_2$ is not applicable for 450 mm x 300 mm washbasin. | | |

© EAC 2019 – All rights reserved 

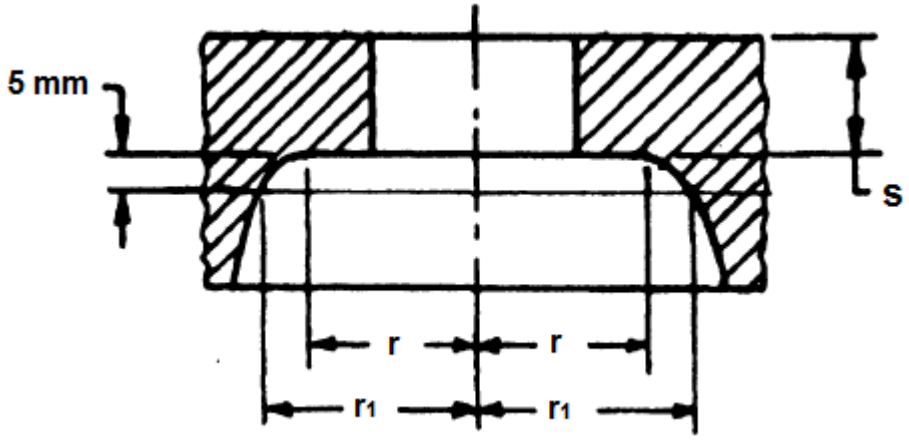


**Figure 2 — Details of tap fitting hole (As measured after the holes punched)**

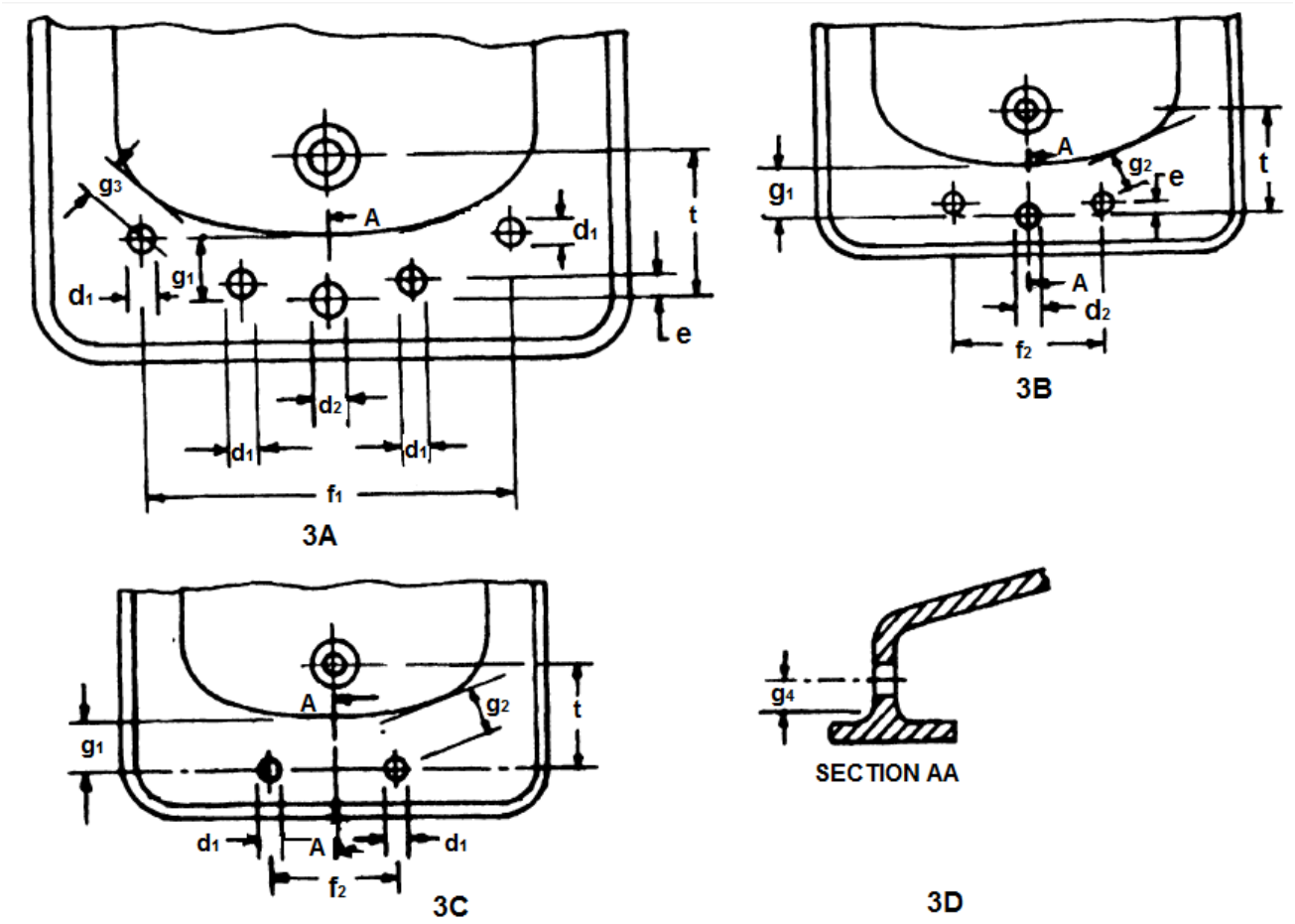


**Figure 3 — Connecting dimensions of washbasins with five, three and two tap holes**

**6.2.3** Connecting dimensions for washbasins with single tap hole shall conform to Table 4 read with Figures 2 and 4


© EAC 2019 – All rights reserved

**Table 4 — Connecting dimensions for wash basins with centre tap hole**

| Description | Reference in figures 2&4 | Dimensions, mm |
|---|---|---|
| Diameter of tap hole | $d_2$ | $35^{+2}_{-1}$ |
| Horizontal distance between centre line of tap hole and edge of bowl | $g_1$ | 80, max. |
| Distance from wall or inside of skirting (where provided)and centre line of tap hole | $g_4$ | 32, min. |
| Distance from wall (where skirting is not provided) and centre of tap hole | $g_4$ | 40, min. |
| Radius of a cylinder with the same axis as the fitting hole which permits the following free space below the inside edge of the tap fitting hole:<br>Of 0 to 5 mm height<br>Of 5 mm and more height | r | 25, min. |
| | $r_1$ | 30, min. |
| Wall thickness in the zone of the tap fitting hole | s | 18, max. |
| Horizontal distance between the axis of the tap hole to the axis of waste outlet opening | t | 170, max. |
| Note Dimension 't' is not applicable for angle back wash basin and 450 mm x 300 mm wash basin | | |

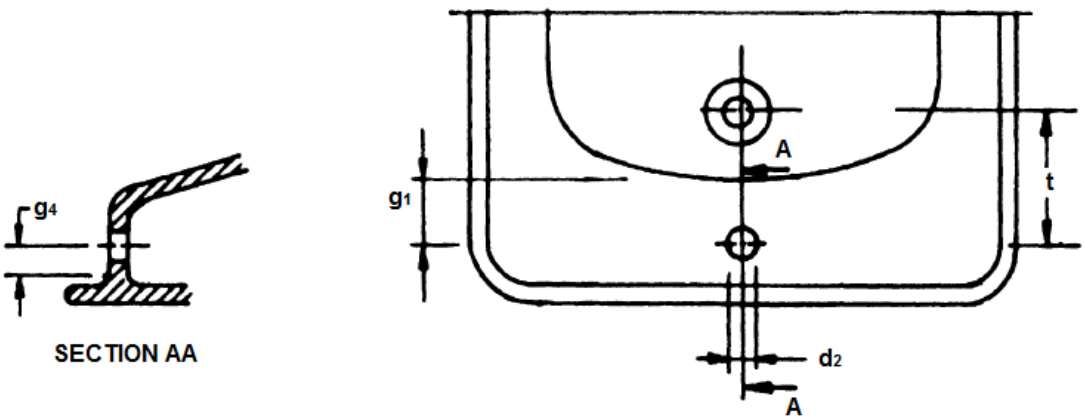


**Figure 4 — Connecting dimensions for single tap hole wash basins**

**6.2.4** Dimensions of waste outlet hole shall conform to those given in Table 5 read with Figure 5.

© EAC 2019 – All rights reserved

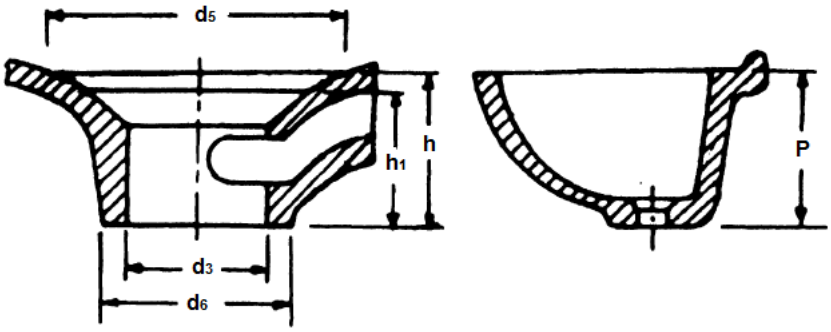


**Figure 5 — Dimensions of waste outlet hole**


© EAC 2019 – All rights reserved

**Table 5 — Dimensions of waste outlet hole**

| Description | Reference in Figure 5 | Dimensions mm |
|---|---|---|
| Diameter of waste outlet opening | $d_3$ | $46^{+2}_{-3}$ |
| Maximum diameter at the bevelled portion of the waste outlet opening | $d_5$ | 75, max. |
| Outside diameter of the seating face of the waste outlet opening | $d_6$ | 60, min. |
| Depth of outlet for wash basin with integral overflow | h | 45 — 50. |
| Vertical distance between the tap platform and the lower plane of the waste outlet hole | p | 250, max |

6.2.5 Fixing (mounting) dimensions for wall-hung basin shall conform to Table 6, read with Figure 6.

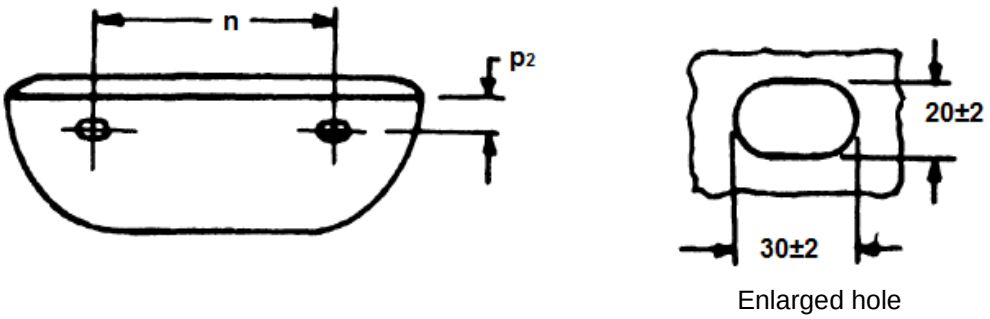


**Figure 6 — Fixing dimensions for wall hung wash basins**

**Table 6 — Fixing dimensions for wall hung washbasins**

| Description | Reference in figure 6 | Size of wash basin mm | Dimensions mm |
|---|---|---|---|
| Horizontal distance between the axis of two fixing holes | n | Up to and including 550x400<br>Above 550x400 | 240±10<br>280±10 |
| Vertical distance between the centre lines of the fixing holes and the tap platform | $p_2$ | All sizes of flat back wash basins (except 450x300) and angle back wash basin | 40—72 |

### 6.3 Tolerances

Where tolerances are not given for specific dimensions, these shall be in accordance with CD/UG/01:2019.

## 7 Construction

### 7.1 Soap holders

The wash basin shall be of one-piece construction with/without a combined overflow and soap holder(s). All internal angles shall be such as to facilitate easy cleaning.

© EAC 2019 – All rights reserved 

Wash basin for use in surgeon's room and operation theatre shall not be provided with soap holder recess and combined overflow.

## 7.2 Tap holes

Wash basins shall be provided with five, three, two or single tap hole, round in shape and symmetrical about the centre line of the basin and either fully punched or semi-punched. The tap holes shall be suitable for fixing pillar taps. The level of the top of the platform which accommodates the taps shall not be below the spill over level of the basin irrespective of the overflow arrangement. For angle back basin, provision shall be made for one or two tap holes in any suitable position in accordance with the design of the manufacturer.

### 7.3 Waste hole

Each basin shall have a circular waste hole of dimension as per the details given in 6.2.4. The waste hole shall accommodate a waste fitting having a flange diameter of 64 mm.

## 7.4 Fixing arrangements

### 7.4.1 Bracket stud

Any provision to receive the brackets on the underside of the wash basin shall be capable for receiving a bracket stud not exceeding 13 mm in diameter, 8 mm high and 305 mm from the back of the basin to the centre of the stud. Horizontal distance between two stud provisions shall be A-50 mm, where A is length in mm of wash basin.

### 7.4.2 Screw fixing

For flat back wash basins of size up to 450 mm x 300 mm and for angle back wash basins of size up to 400 mm x 400 mm, screw-fixing holes (minimum two) shall be provided at a suitable distance and location. The screwing hole diameter shall be 6.5 mm minimum.

### 7.4.5 Rag bolt

Additional/alternate provision for fixing the wash basin on rag bolts may be provided at the back of the basin and shall not be visible from outside when installed in its normal position. The rag bolt holes shall be of dimensions given in Table 6, suitable for a minimum M8 size bolt.

## 7.5 Overflow

An overflow slot shall have a horizontal dimension not larger than 64 mm and an area not less than 500 $mm^2$. A round overflow of the same area can be an alternate design.

## 7.6 Soap recess(es)

The soap recess(es) shall have adequate provision for draining into the bowl.

## 7.7 Load bearing test

The wall hung wash basins of 500 mm and above length shall be installed on rag bolts or brackets. A load of $110^{+5}_{-0}$ kg or a force of $1.1^{+0.05}_{-0}$ kN shall be applied for a period of 1 h by placing it on a wooden beam with a cross-section of 100 mm x 100 mm positioned across the centre of the opening of the top surface of the wash basin. No damage or defect shall occur to the wash basin and the fastenings.


© EAC 2019 – All rights reserved

### 7.8 Chain stay hole

The chain stay hole, where provided shall be 10mm diameter and shall be completely above the level of the top of the overflow hole/slot.

### 7.9 Pedestal

The quality and thickness of the ware and the quality of the glaze of the pedestals shall not be less than that of the basins with which it is to be installed. They shall be recessed at the back for the reception of supply and waste pipe and fittings. They shall be so constructed as to support the basins rigidly and adequately and shall be so designed as to make the height from the floor to top of the rim of basin between 750 mm to 850 mm. (see figure 7)

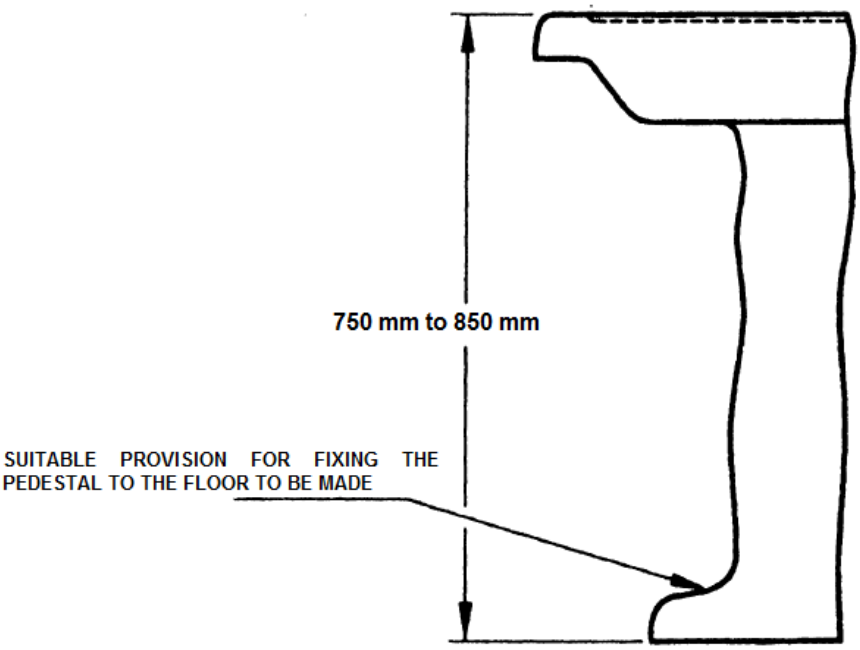


**Figure 7 — Pedestal for wash basin**

## 8 Finish

Inside surface of washbasins shall be glazed uniform and smooth in order to ensure efficient draining.

## 9 Sampling, inspection and methods of test

### 9.1 Sampling and inspection

The recommended method of sampling, process inspection and lot inspection of washbasins shall be given in DEAS 1017-2:2019.

### 9.2 Methods of test

**9.2.1** Applicable tests as given in DEAS 1017-1:2019 except shall be conducted.

© EAC 2019 – All rights reserved 

**9.2.2** Overflow test. The wash basins shall be installed in a stand with a pop up waste fitting. The rate of water supply shall be adjusted to 9.5 l/min. The waste outlet shall be closed. The elapsed time from the onset of water flowing into the overflow opening until the water begins to overflow the flood level shall be measured. The wash basin shall drain for 5 min without overflowing.

## 10 Marking

Wash basins shall be legibly and indelibly marked at a suitable place with the following:

a) name or trade-mark of the manufacturer, and

b) batch/lot number or date of manufacture


© EAC 2019 – All rights reserved

# Bibliography

IS 2556-4:2004, Vitreous sanitary appliances (vitreous china) — Specification — Part 4 specific requirements of wash basins

© EAC 2019 – All rights reserved 

© EAC 2019 – All rights reserved