RWANDA STANDARD

DRS 434

1st edition

2019-11-dd

Furniture — Tables — Test methods for the determination of stability, strength and durability

ICS 97.140

Reference number

DRS 434: 2019

In order to match with technological development and to keep continuous progress in industries, standards are subject to periodic review. Users shall ascertain that they are in possession of the latest edition

Requests for permission to reproduce this document should be addressed to:

Rwanda Standards Board

P.O Box 7099 Kigali-Rwanda

KK 15 Rd, 49

Tel. +250 788303492

Toll Free: 3250

E-mail: info@rsb.gov.rw

Website: www.rsb.gov.rw

ePortal: www.portal.rsb.gov.rw

Contents

Page

Foreword

Rwanda Standards are prepared by Technical Committees and approved by Rwanda Standards Board (RSB) Board of Directors in accordance with the procedures of RSB, in compliance with Annex 3 of the WTO/TBT agreement on the preparation, adoption and application of standards.

The main task of technical committees is to prepare national standards. Final Draft Rwanda Standards adopted by Technical committees are ratified by members of RSB Board of Directors for publication and gazettment as Rwanda Standards.

DRS 434 was prepared by Technical Committee RSB/TC 54, *Timber, furniture and engineered wood of TC 54.*

Committee membership

The following organizations were represented on the Technical Committee on *Timber, furniture and engineered wood* (RSB/TC 54) in the preparation of this standard.

Action pour le Development de l`Artisanat au Rwanda (ADARWA)

Association pour la défense des droits des consommateurs au Rwanda (ADECOR)

Association pour la Promotion des Artisans du Bois (APROAB)

GIZ Eco — Emploi

Integrated Polytechnic Regional Centre (IPRC) Kitabi

Kalka and Partners Ltd

Manumetal Ltd

Mass Design Ltd

Ministry of Trade and Industry (MINICOM)

National Industrial Research and Development Agency (NIRDA)

New Forest Company (NFC) Ltd

REAL Contractors Ltd

Rwanda Education Board (REB)

Rwanda Environment Management Authority (REMA)

Rwanda Public Procurement Authority (RPPA)

Rwanda Water and Forestry Authority (RWFA)

Straw Tech Building Solutions

University of Rwanda – College of Agriculture, Animal Sciences and Veterinary Medecine (UR – CAVM)

University of Rwanda – College of Science and Technology (UR – CST)

Rwanda Wood Value Chain Association/Private Sector Federation (WVCA/PSF)

Rwanda Standards Board (RSB) – Secretariat

Introduction

Despite the Rwandan growth trend, the wood sector has not been implemented as required to produce high quality wood products and vigorous competitive market. The quality of wooden furniture is highly affected by the quality of timber, standardized production chain, quality control mechanism and grading rules. The lack of aforesaid factors results into market dominated by poor quality wooden furniture, compromised safety and unfair competition at the market.

The emerging market dynamics show that consumer's preferences have gradually shifted from furniture made by local timbers to the imported ones, which is considered as a limiting factor to the development and growth of the wood economy in Rwanda.

To ensure a positive trade balance in wood market there is a dire need to improve and ensure quality of domestic wood products. This Standard is one of a series prepared on furniture in Rwanda. The series currently consists of the following:

DRS 433 Furniture – Chairs and tables for home furniture - Functional sizes and performance requirements

DRS 434 Furniture - Tables - Test methods for the determination of stability, strength and durability

DRS 435 Timber in joinery — General requirements

FDRS 413 Furniture — Quality and grading of wooden furniture

FDRS 423 Furniture – Chairs and tables for office furniture – Functional sizes and performance requirements

FDRS 424 Furniture – Specifications for bedsteads

FDRS 425 Furniture – Storage units - Functional sizes, stability, strength and durability

FDRS 426 Furniture - Chairs and tables for educational institutions - Functional sizes and performance requirements

FDRS 427 Round and sawn timber – Nomenclature of timbers used in Rwanda

Furniture — Tables — Test methods for the determination of stability, strength and durability

1 Scope

This Standard specifies test methods for the determination of stability, strength and durability of the structure of all types of tables and desks without regard to use, materials, design/construction or manufacturing process.

Test methods for the assessment of ageing, degradation, and electrical functions are not included.

This Standard does not include any requirements. Requirements for different end uses can be found in other Standards.

2 Normative references

The following documents are referred to in the text in such a way that some or all of their content constitutes requirements of this document. For dated references, only the edition cited applies. For undated references, the latest edition of the referenced document (including any amendments) applies.

ISO 7619-2:2004, Rubber, vulcanized or thermoplastic – Determination of indentation hardness – Part 2: IRHD pocket mete method

3 Terms and definitions

For the purposes of this standard, the following terms and definitions apply.

3.1

structure

load bearing parts of furniture such as the frame, top and legs

3.2

ancillary surface

surface additional to the main surface intended for occasional use as part of the table top

3.3

duty cycle

length of time the height adjustable table's drive system may be operated without impairing its useful life

3.4

levelling device

device intended to keep the table top horizontal e.g. adjustable feet or similar

3.5

suitable device

3.6

stability

resistance to undesirable movement

3.7

strength

ability to resist deformation

3.8

durability

ability to remain functional without requiring excessive maintenance or repair

4 Symbols (and abbreviated terms)

IRHD International rubber hardness tester

5 General test conditions

5.1 Preliminary preparation

The furniture shall be tested as delivered. Knock-down furniture shall be assembled according to the instructions supplied by the manufacturer. If the instructions allow the furniture to be assembled or combined in different ways, the most adverse combination shall be used for each test. Knock-down fittings shall be tightened before testing. Further tightening shall not take place unless specifically required by the manufacturer.

Unless otherwise specified by the manufacturer, the sample for testing shall be stored in indoor ambient conditions for at least 24 h immediately prior to testing. The tests shall be carried out at indoor ambient conditions but if during a test the temperature is outside the range 15 °C to 25 °C the maximum and/or minimum temperature shall be recorded in the test report.

5.2 Application of forces

The test forces in durability and static load tests shall be applied sufficiently slowly to ensure that not even negligible dynamic load has appeared. The forces in durability tests shall be applied sufficiently slowly to ensure that kinetic heating does not occur.

5.3 Tolerances

Unless otherwise stated, the following tolerances are applicable to the test equipment:

- Forces: ± 5 % of the nominal force;
- Velocities: ± 5 % of the nominal velocity;
- Masses: ± 1 % of the nominal mass;
- Dimensions: ± 1 mm of the nominal dimension;
- Angles: ± 2° of the nominal angle.

The accuracy for the positioning of loading pads and impact plates shall be ± 5 mm.

NOTE For the purposes of uncertainty measurement, test results are not considered to be adversely affected when the above tolerances are met.

6 Test equipment and apparatus

Unless otherwise stated, the tests may be conducted by any suitable device because the results are not dependent upon the apparatus, except in the case of impact tests where the apparatus described in 5.2 shall be used.

The equipment shall not inhibit deformation nor cause unnatural deformation of the unit/component, i.e. it shall be able to move so that it can follow the deformation of the unit/component during testing.

With the exception of the horizontal static, durability and stiffness tests, described in 6.2 and 6.4, all loading pads shall be capable of pivoting in relation to the direction of the applied force and the pivot point shall be as close as practically possible to the load surface.

Loading pads for the horizontal static, durability and stiffness tests, described in 6.2 and 6.4, shall not pivot.

With the exception of the horizontal static, durability and stiffness tests described in 6.2 and 6.4, if a loading pad tends to slide, use a slip resistant material between the loading pad and the surface being tested.

6.1 Vertical impactor

A vertical impactor is shown in figure 1 and consists of the following:

6.1.1 Circular body

The circular body shall have a diameter of (200 ± 5) mm separated from the striking surface by helical compression springs and free to move relative to it on a line perpendicular to the plane of the central area of the striking surface.

The body and associated parts minus the springs shall have a mass of (17 ± 0,1) kg and the whole apparatus, including mass, springs and striking surface, shall have a mass of (25 ± 0,1) kg.

6.1.2 Springs

Springs which shall be such that the nominal spring rate of the combined spring system is (7 ± 2) N/mm and the total friction resistance of the moving parts is less than 1 N.

The spring system shall be compressed to an initial load of (1.040 ± 5) N (measured statically) and the amount of spring compression movement available from the initial compression point to the point where the springs become fully closed shall be not less than 60 mm.

6.1.3 Striking surface

The striking surface which shall be a rigid circular object, (200 ± 5) mm in diameter, the face of which has a convex spherical curvature of (300 ± 5) mm radius with a 12 mm front edge radius.

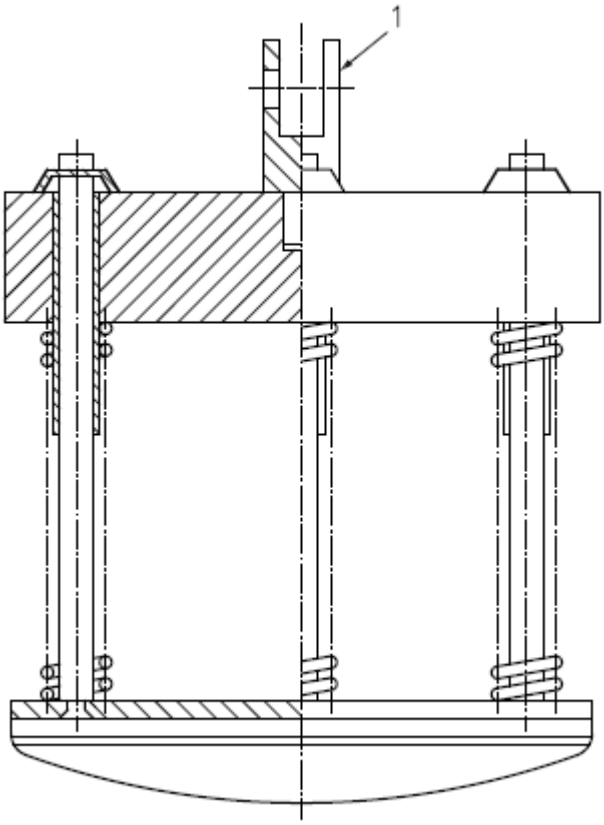

Key

1 joint of lifting device not inhibiting free fall.

Figure 1 – Vertical impactor

6.2 Floor

Floor, horizontal, flat and rigid with a smooth surface. For the drop test (6.9) the floor shall be faced with a 2 mm thick layer of rubber with a hardness of (85 ± 10) IRHD according to ISO 7619-2.

6.3 Stops

Stops to prevent the article from sliding but not tilting, no higher than 12 mm except in cases where the design of the item necessitates the use of higher stops, in which case the lowest that will prevent the item from moving shall be used.

6.4 Loading pad

The loading pad is a rigid cylindrical object, (100 ± 5) mm in diameter, with a flat, smooth face and an edge radius of 10 to 15 mm.

6.5 Foam

Foam of (20 ± 5) mm thick layer of flexible with a bulk density of (120 ± 25) kg/m^3.

6.6 Steel test tube

Steel test tube of (18 ± 1,5) mm in diameter and (1,5 ± 0,5) mm in wall thickness with a length such that a force can be applied at a distance of (2.200 ± 10) mm above the floor.

6.7 Test surface for castor durability test

Test surface for castor durability test, horizontal, flat smooth and rigid steel surface.

6.8 Obstacles for castor durability test

Obstacles for castor durability test, steel strips (50 ± 5) mm wide and (2 ± 0.5) mm high with the top edges having a radius of (2 ± 0.5) mm, (500 ± 10) mm apart and parallel on the floor surface and perpendicular to the test direction.

7 Test procedures – Strength and durability

7.1 General

Unless otherwise specified, the tests shall be carried out in the configuration most likely to cause failure.

Where the table top can be extended, and the smallest dimension of the unextended table top is less than (300 ± 20) mm, then the extended configuration shall be considered most likely to cause failure. In this case, the extended configuration is considered to be the main surface.

Levelling devices shall be set as near as possible to (5 ± 1) mm from the fully open position whilst ensuring the table top is parallel to the floor.

If a test cannot be carried out as specified in this standard, e.g. because a loading pad cannot be used for the application of a force due to the design of a product, the test shall be carried out as far as possible as specified.

Tables supplied with storage features shall be tested with the specified load in the storage item.

7.2 Horizontal static load test

Position the table on the test surface, in its normal position of use without extending, or inserting, ancillary surfaces.

Unless otherwise specified, height adjustable tables shall be set to their highest position. Restrain the base of the table by stops placed in all directions at the opposite end to that at which the horizontal test force is first to be applied.

Apply the specified mass to an area of (300 ± 50) mm x (300 ± 50) mm, or a diameter of (300 ± 50) mm, to the approximate centre of the table top.

Apply the specified horizontal force by means of the loading pad (5.4) at the table top level in a direction perpendicular to a line joining the two legs/supports, midway between the legs/supports. See Figures 2a, 2c, 2e, 2g and 2i.

If the table top is not secured to the understructure and the top moves when the specified force is applied, reduce the force sufficiently to just prevent movement. Record the force applied. The applied force shall not be reduced below the minimum specified force.

If the unrestrained base lifts when the specified force is applied, reduce the force sufficiently to just prevent lifting. Record the force applied. The applied force shall not be reduced below the minimum specified force. If unrestrained base lifts at this force, the specified mass applied to the table top shall be increased gradually until this tendency ceases.

Leaving the stops in position, use the same procedure to determine the force to be applied in the opposite direction.

One application of the force in each direction represents one cycle.

Repeat the test method applying the specified horizontal force at the work top level along the line joining the two legs/supports. See Figures 2b, 2d, 2f, 2h and 2j.

Apply the same force in the opposite direction.

One application of the force in each direction represents one cycle. Repeat this procedure until each unique leg design/construction has been tested.

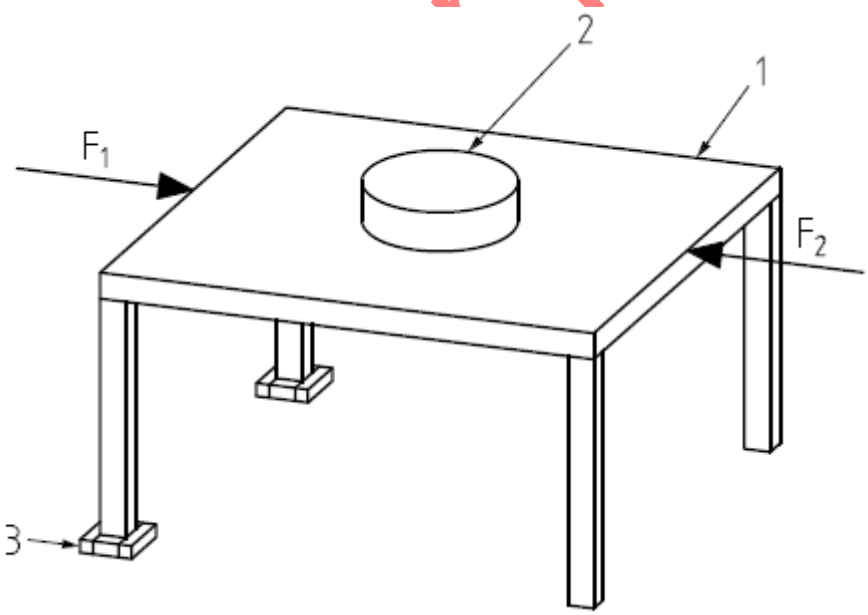

Figure 2a) Rectangular table – first and second directions

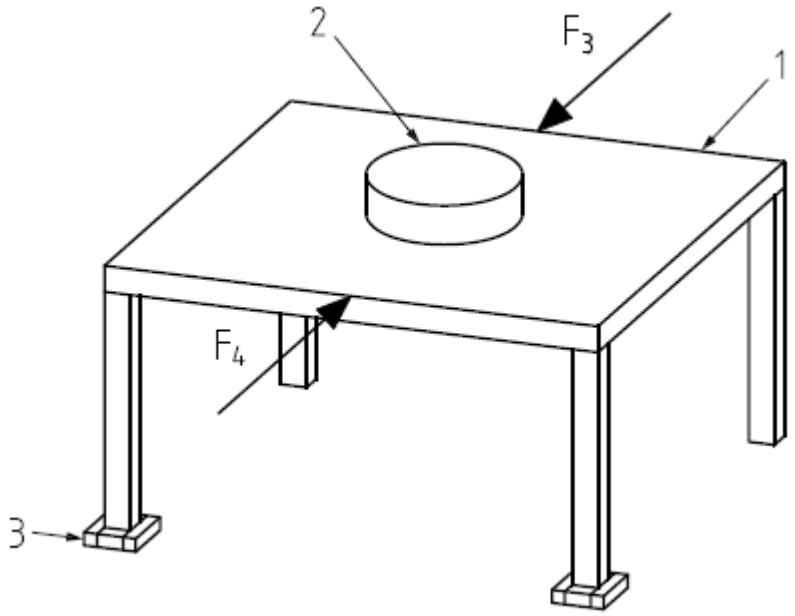

Figure 2b) Rectangular table – third and fourth directions

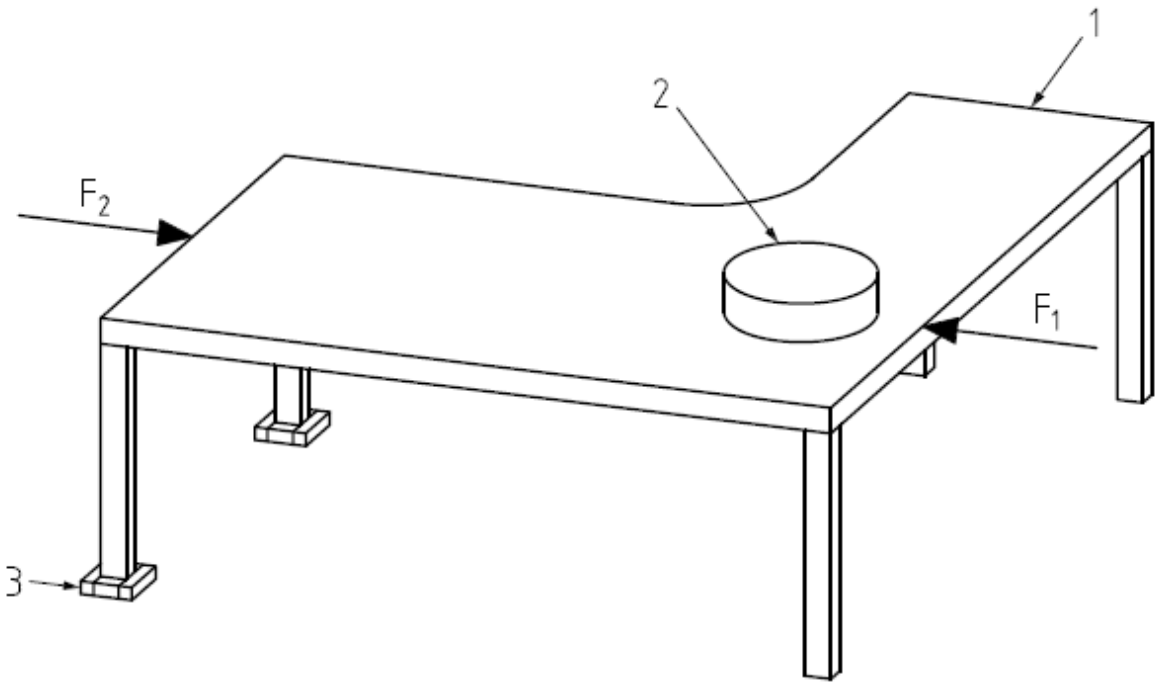

Figure 2c) Irregular shape table - first and second directions

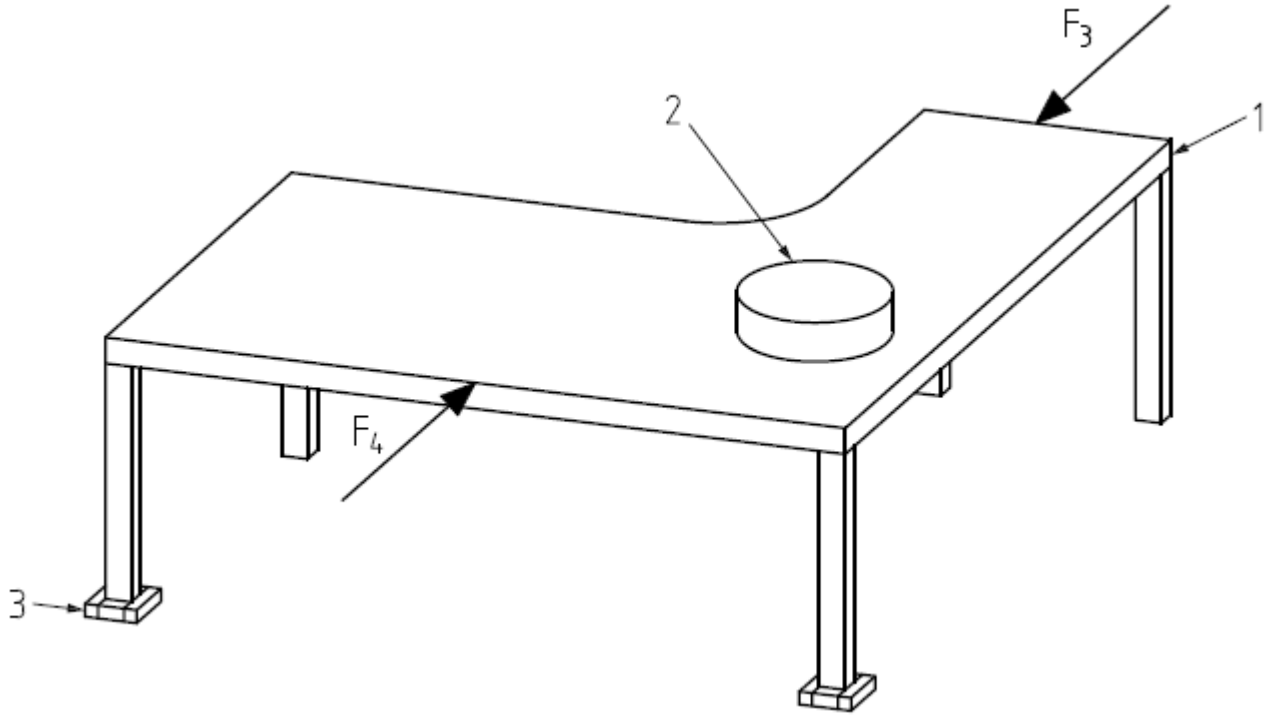

Figure 2d) Irregular shape table - third and fourth direction

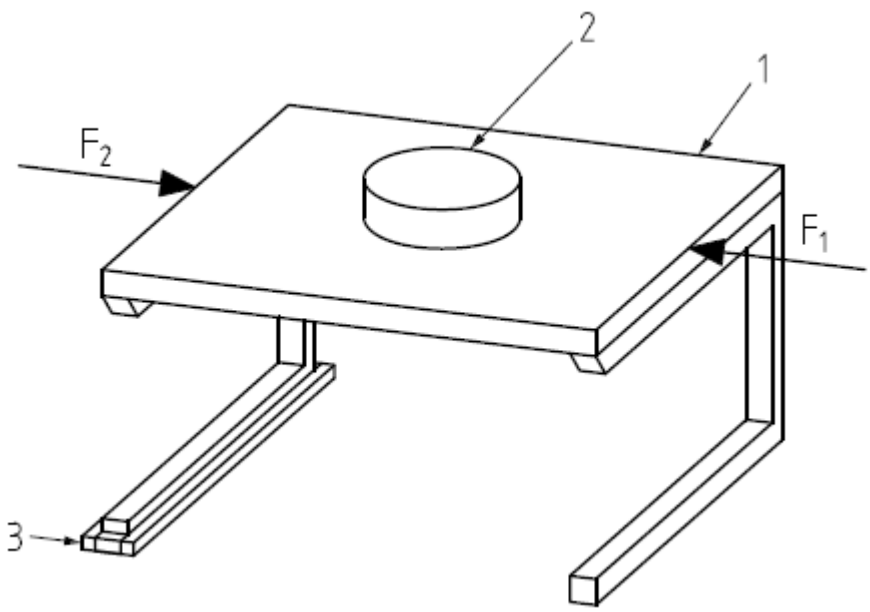

Figure 2e) Cantilever table – first and second directions

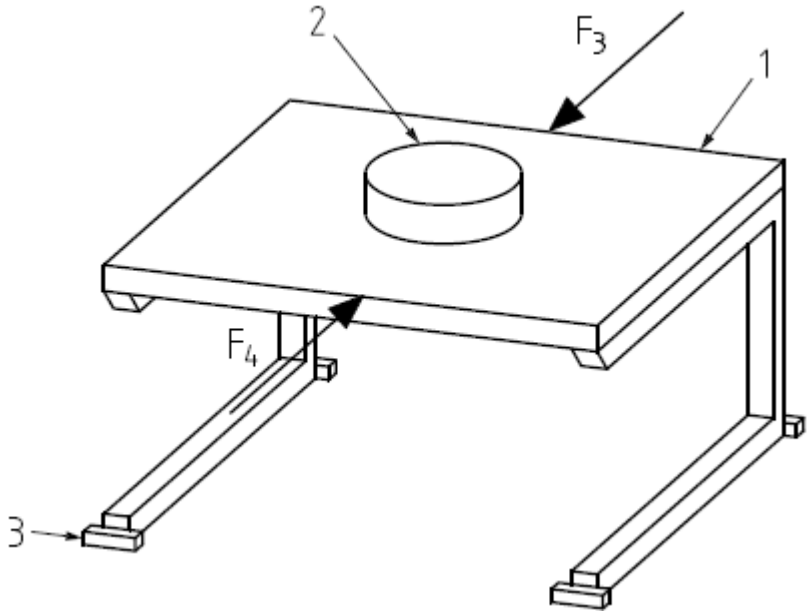

Figure 2f) Cantilever table – third and fourth directions

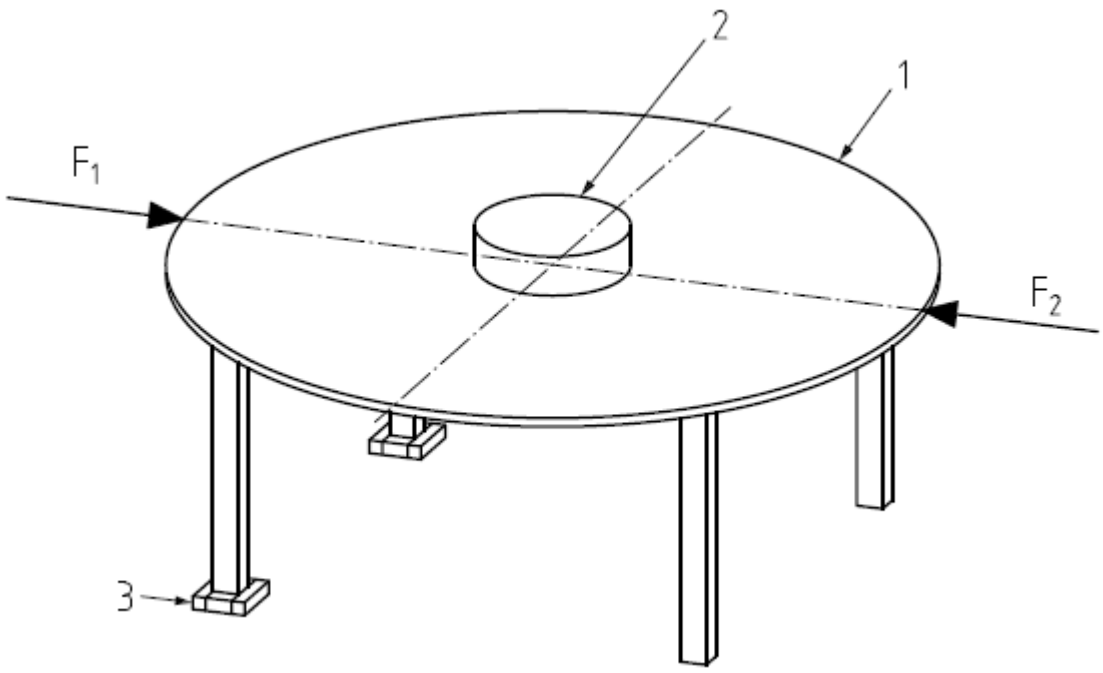

Figure 2g) Round table – first and second directions

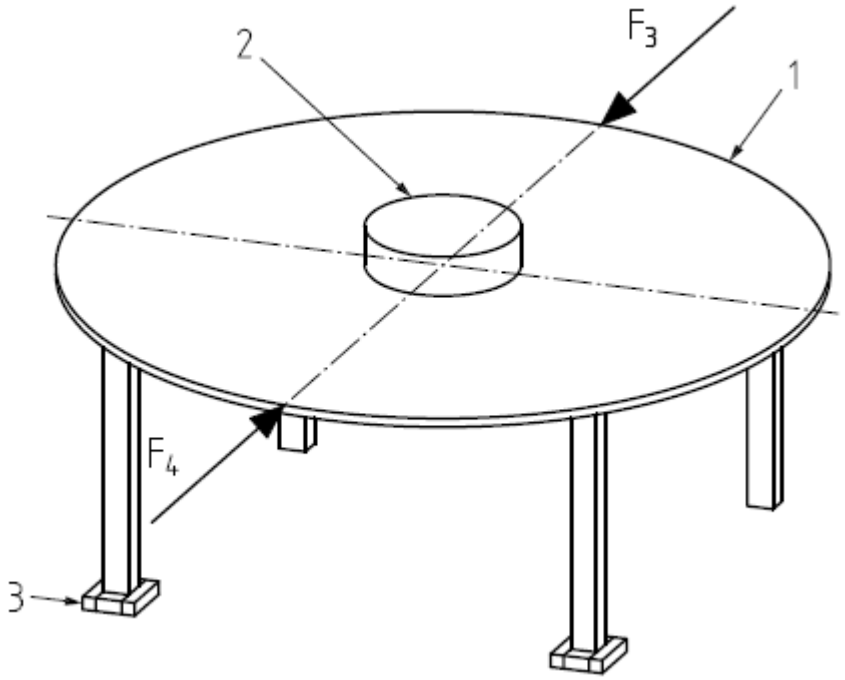

Figure 2h) Round table – third and fourth directions

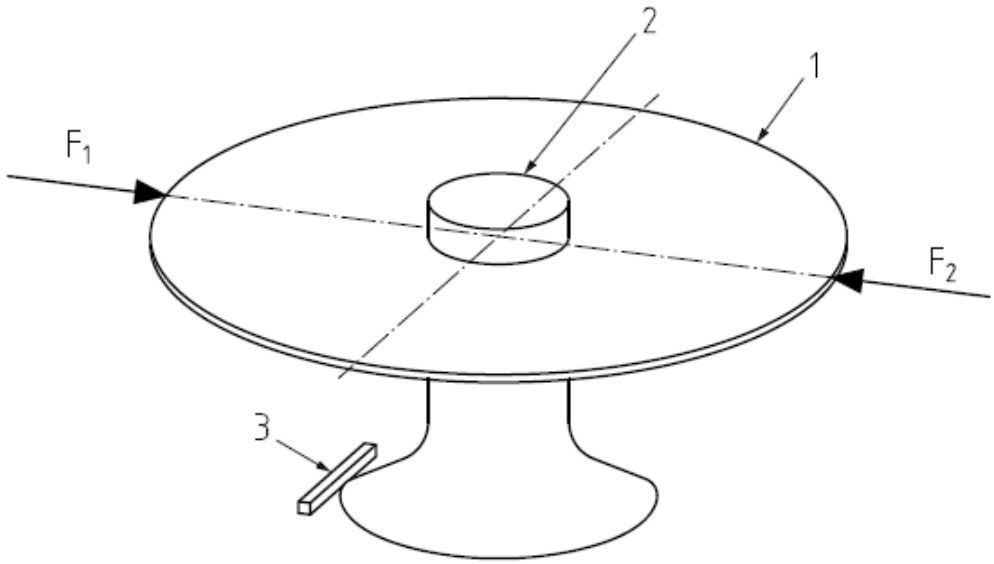

Figure 2i) Round table with central column – first and second directions

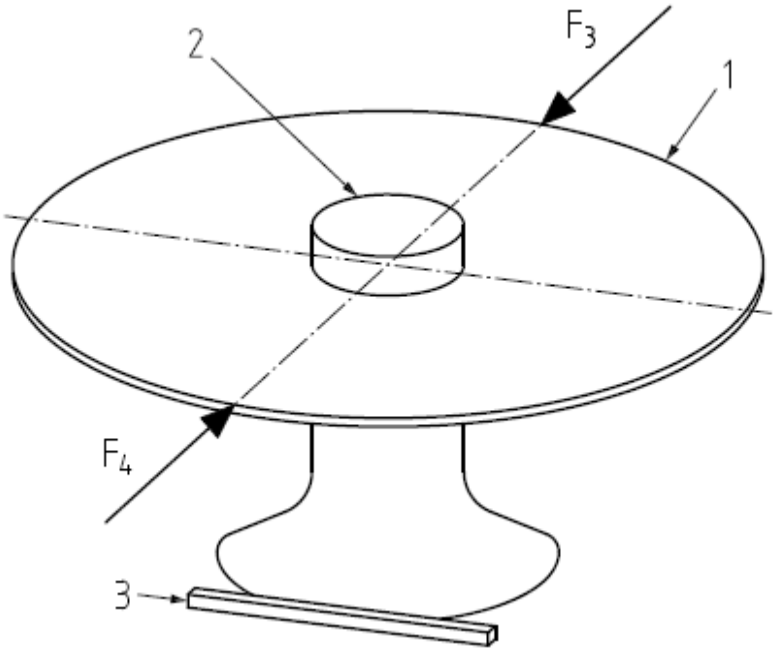

Figure 2j) Round table with central column – third and fourth directions

Key to all figures

F_1 force in first direction 1 table
F_2 force in second direction 2 specified mass
F_3 force in third direction 3 stop
F_4 force in fourth direction

1 Table
2 Specified mass
3 Stop

7.3 Vertical static load tests

7.3.1 Vertical static load on main surface

A table extension added in the centre of the table shall be considered as the main surface. Apply a vertical downward force using the loading pad (5.4) anywhere on the top that is likely to cause a failure, but not less than 100 mm from any edge (see Figure 3).

If the table tends to overturn gradually, move the loading point towards the centre of the table until this tendency ceases.

If there are several such positions, carry out the test at a maximum of four different positions. If deflection measurements are required, maintain the last load for up to 30 min in order to measure the maximum deflection, d. The deflection, d, is the difference in height at the point of loading, between the initial unloaded state and the final state under load.

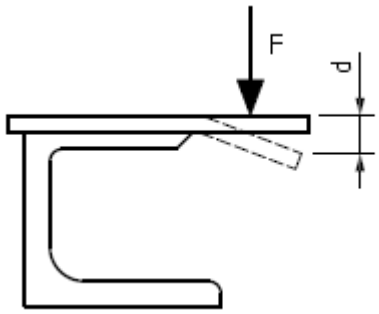

a) Main surface

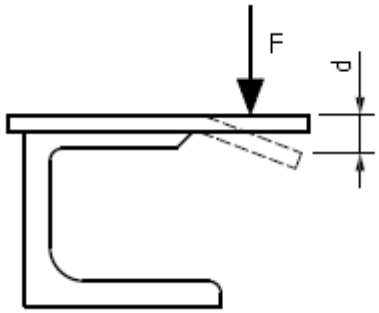

b) Cantilever support

Key
c) d Deflection
d) F Vertical static load

Figure 3 — Vertical static load test - main surface

7.3.2 Additional vertical static load test where the main surface has a length > 1600 mm

A table extension added in the centre of the table shall be considered as the main surface. Apply two vertical downward forces simultaneously using the loading pad (5.4) at points positioned on the longitudinal axis of the table top, (400 ± 20) mm on either side of the transversal axis. See Figure 4.

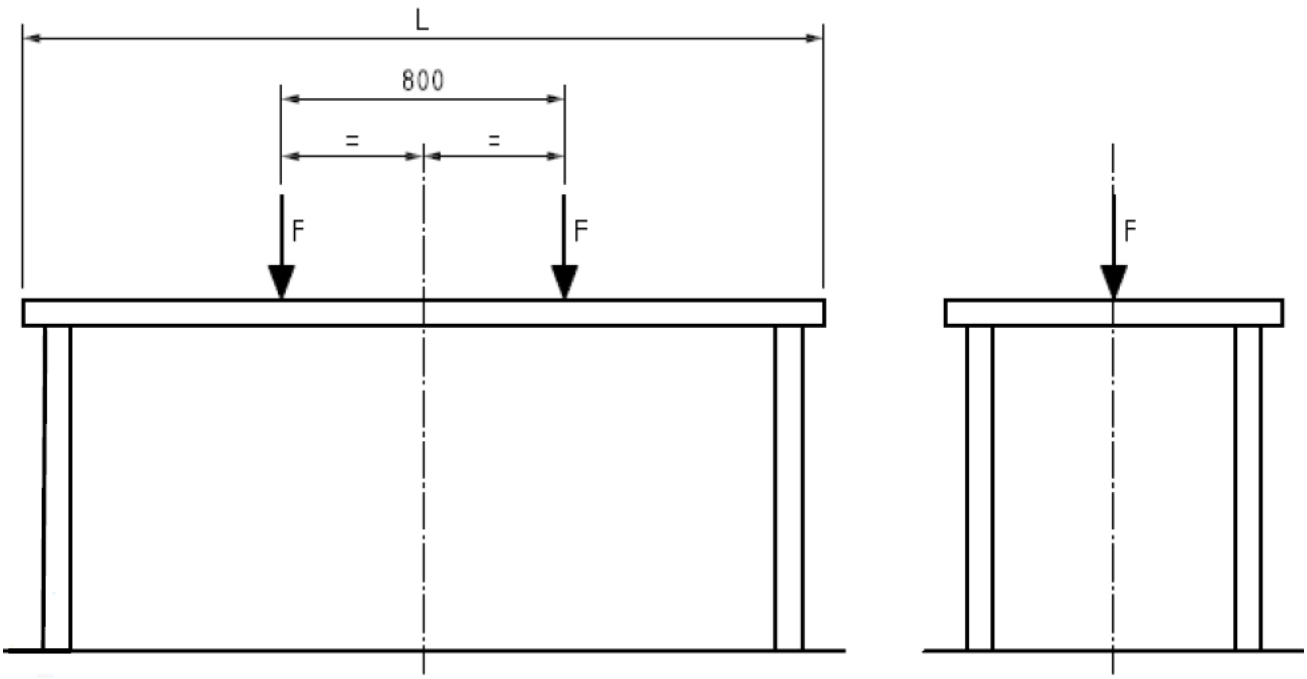

Key

L Length of top

F Vertical static load

Figure 4 — Additional vertical static load test

7.3.3 Vertical static load on ancillary surface

A table extension added in the centre of the table shall be considered as the main surface.

A part of the main surface in the unextended configuration may become an ancillary surface in the extended configuration. Apply a vertical downward force using the loading pad (5.4) anywhere on the ancillary surface that is likely to cause a failure, but not less than 100 mm from any edge (see Figure 5).

If the article tends to overturn, load the main table top gradually to prevent overturning. If there are several such positions, repeat the test at a maximum of two different positions. If deflection measurements are required, maintain the last load for up to 30 min in order to measure the maximum deflection, d. The deflection, d, is the difference in height at the point of loading, between the initial unloaded state and the final state under load.

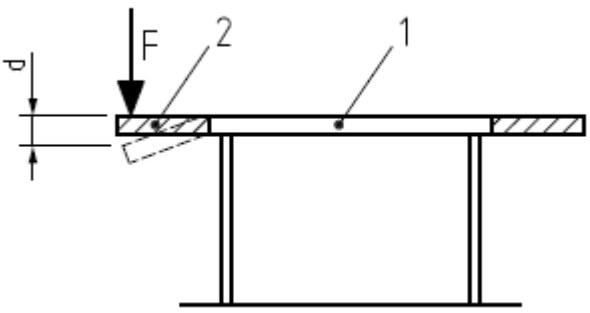

Key

d Deflection

F Vertical static load

1 Main surface

2 Ancillary surface

Figure 5 — Vertical static load test - ancillary surface

7.4 Horizontal durability and stiffness test

7.4.1 General

Position the table on the test surface, in its normal position of use. Tables with extensions inserted in the centre shall be tested in the extended configuration. All other tables shall be tested without extending ancillary surfaces.

Restrain the base of the table by placing stops around each leg/base (in all directions) (see Figure 6). Place the specified mass on the table top on an area of (300 ± 50) mm x (300 ± 50) mm, or a diameter of (300 ± 50) mm, at the point most likely to prevent the table lifting off the floor.

7.4.2 Horizontal durability test

Apply two alternating horizontal forces at the table top level by means of two loading pads (5.4), one at one end of the table 50 mm from one corner/edge, a, (and one at the opposite end/edge, b, (see Figure 6a)).

If the table top is not secured to the understructure and the top moves when the specified force is applied, reduce the force sufficiently to prevent movement. Perform the test using this reduced force in that direction only. Record the value of any reduced force used.

If the table tends to lift in one direction of loading at a load less than that specified, reduce the horizontal force to the value determined at the beginning of the test process. Perform the test using this reduced force in that direction only. Record the value of any reduced force used.

Repeat the procedure at the other corner positions, c and d, (see Figure 6a)).

Carry out the test for the number of cycles specified.

The test may be carried out in a one stage cycle a, c, b, d or in a two stage cycle a, b followed by c, d.

For table tops with a cantilever support at one end, carry out the test as shown in Figure 6b).

For table tops attached to another table top at one end, carry out an additional test as shown in Figure 6c).

If measurements of the horizontal movement are required, this shall be measured at the beginning and end of the test, when the load is changed from one end to the opposite end.

For tables with round tops, direction a, b shall be through the longitudinal axis. Direction c, d shall be on a line perpendicular to the direction a, b and (50 ± 5) mm from outermost edge of the table (see Figure 6d)).

For tables with curved table tops special loading pads may be used.

For tables with a triangular base or three legs, direction a, b shall be perpendicular to one side of the base or to the line joining two legs and passing throughout the third corner of the base or the third leg. Direction c, d shall be parallel to one side of the base or the line joining two legs. For tables with round tops, and featuring a triangular base or three legs, a, b shall be through the longitudinal axis. Direction c, d shall be on a line perpendicular to the direction a, b and (50 ± 5) mm from outermost edge of the table (see Figure 6e)).

For tables with round tops, and featuring a cross leg support, direction a, b shall be through the longitudinal axis. Direction c, d shall be on a line perpendicular to the direction a, b and (50 ± 5) mm from outermost edge of the table (see Figure 6f)).

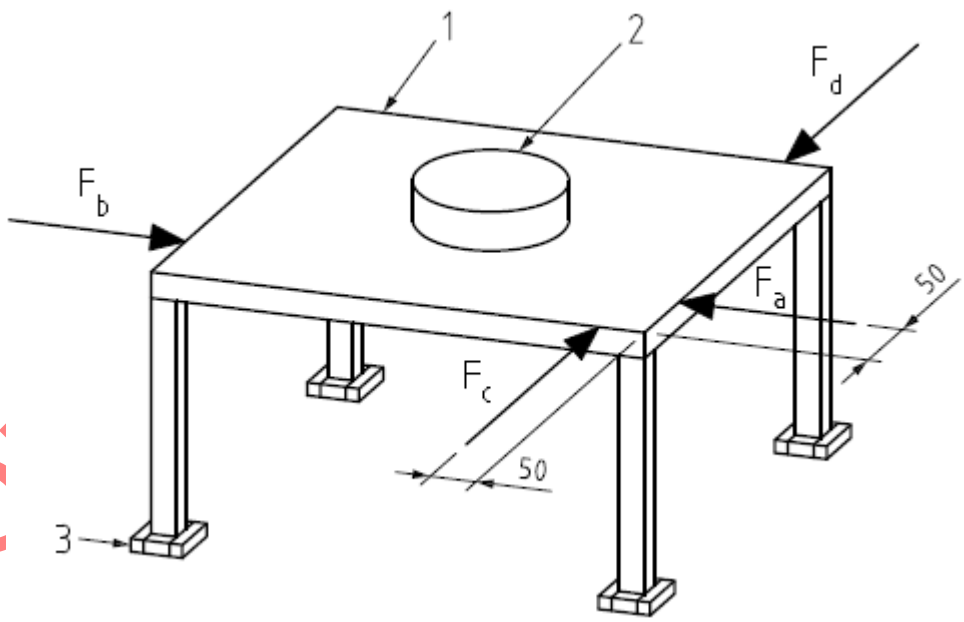

Figure 6a) Main surface

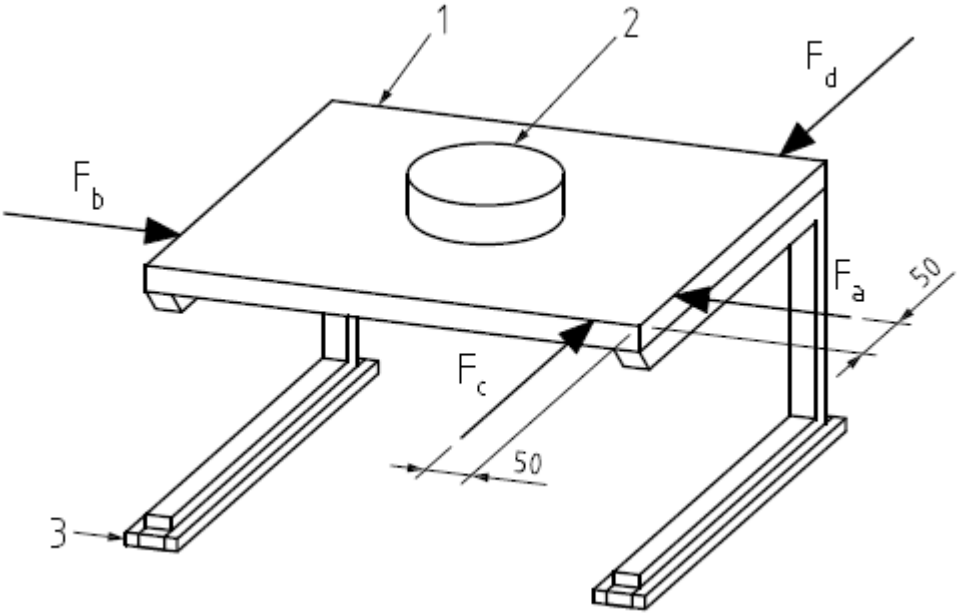

Figure 6b) Cantilevered tables

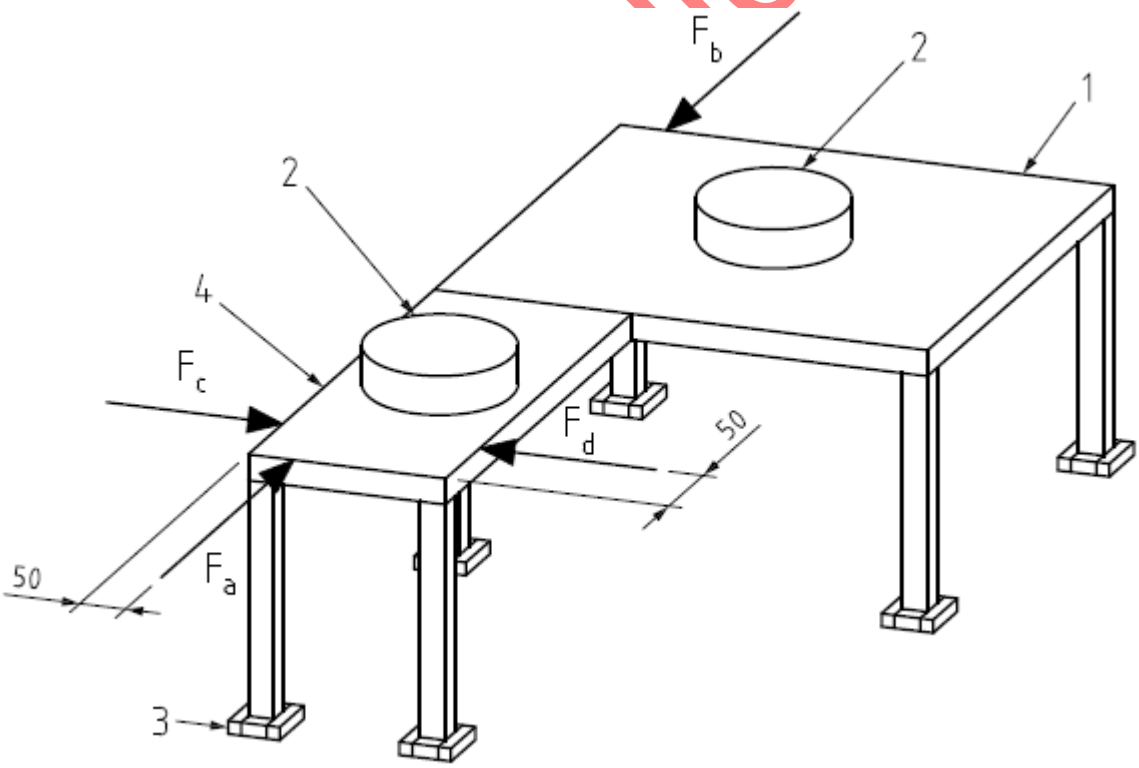

Figure 6c) Additional tops

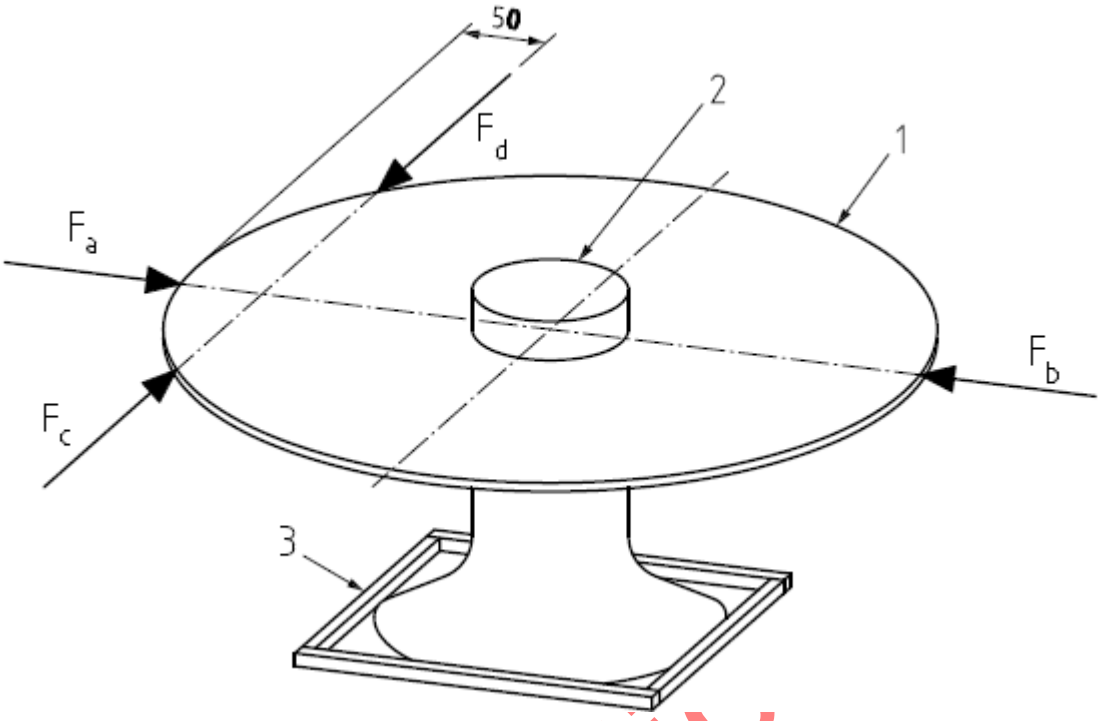

Figure 6d) Round and elliptical tops

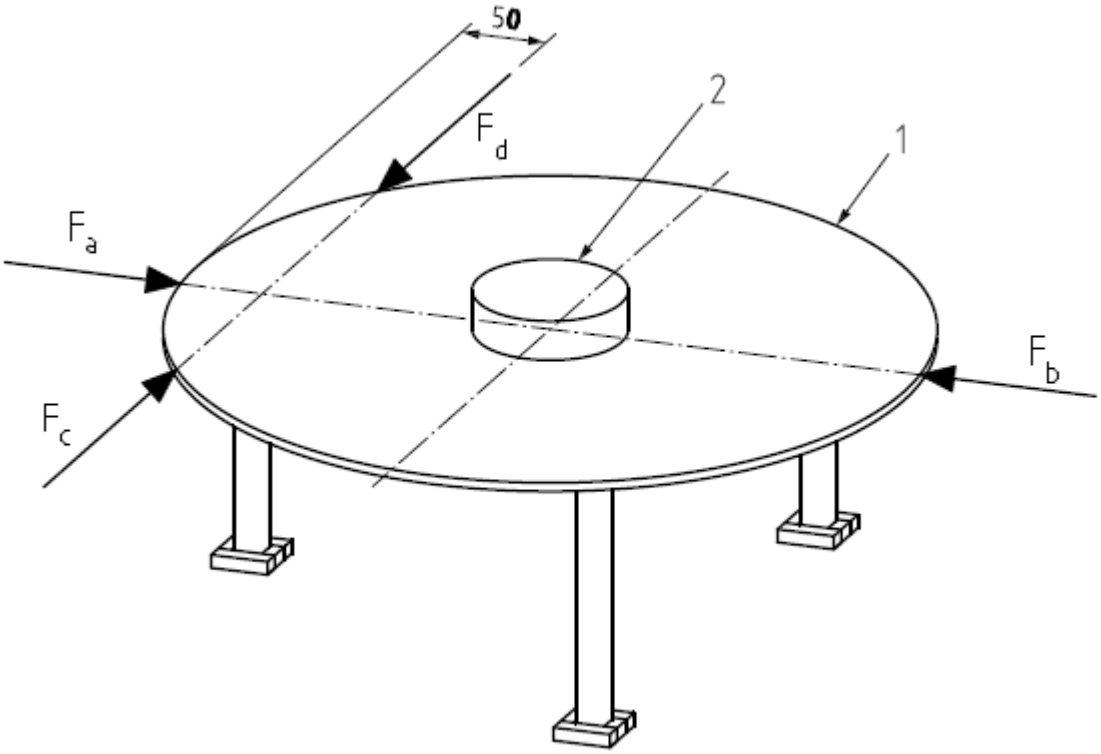

Figure 6e) Round and elliptical tops with three legs

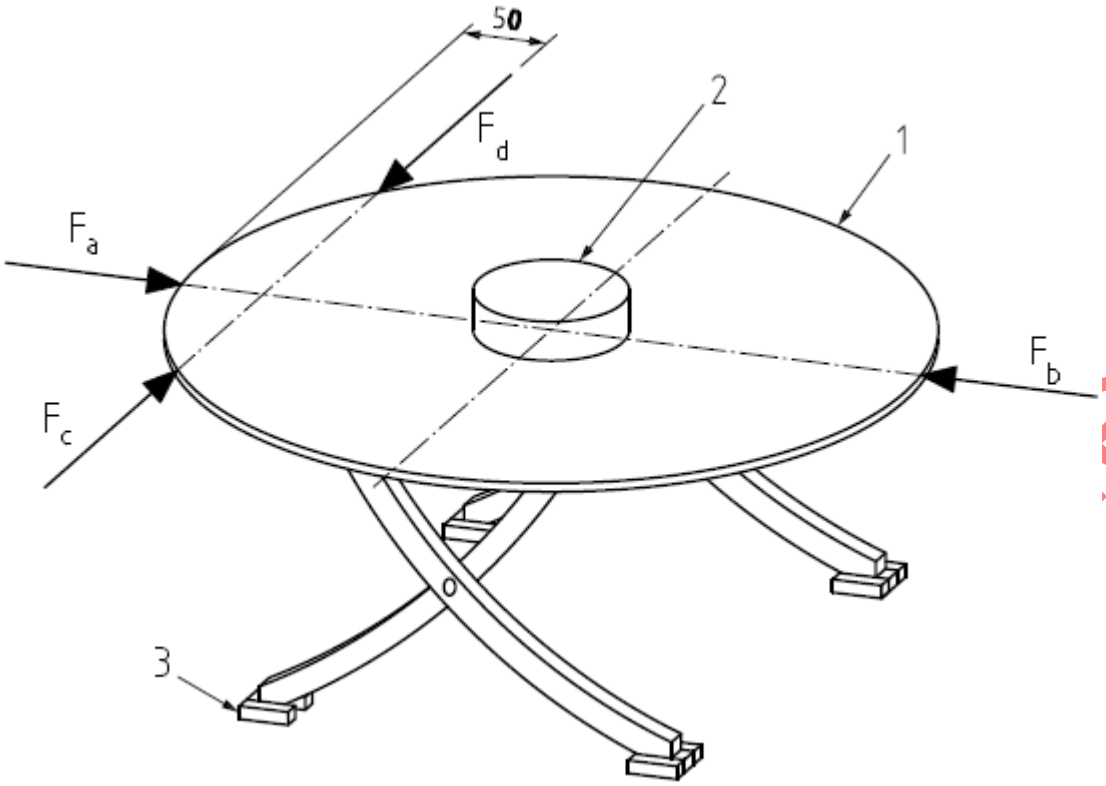

Figure 6

Key to all figures

F_a Force applied at point a	1 Main table top
F_b Force applied at point b	2 Specified mass
F_c Force applied at point c	3 Stops
F_d Force applied at point d	4 Additional top

7.4.3 Stiffness of the structure

Apply the test force by means of the loading pad (5.4), at the table top level in a direction perpendicular to a line joining two legs/supports and midway between the legs/supports, or midway between the outermost legs for a table with more than two legs in a straight line.

Maintain the force for (10 ± 1) s and record the position of a point D on the length of the table. Remove the force and repeat it in the opposite direction and record the distance of the horizontal travel of the point. The total distance that point D moves, from its location when the force in one direction is applied, to its location when the force is applied in the other direction, is defined as D_1 (see Figure 7a)). Measure and record D_1.

Repeat the procedure using horizontal forces along the transverse centreline. The total distance that point D moves, from its location when the force in one direction is applied to its location when the force is applied in the other direction, is defined as D_2 (see Figure 7b)). Measure and record D_2.

If the table top is not secured to the understructure and the top moves when the specified force is applied, reduce the force sufficiently to prevent movement. Perform the test using this reduced force in that direction only. Record the value of any reduced force used.

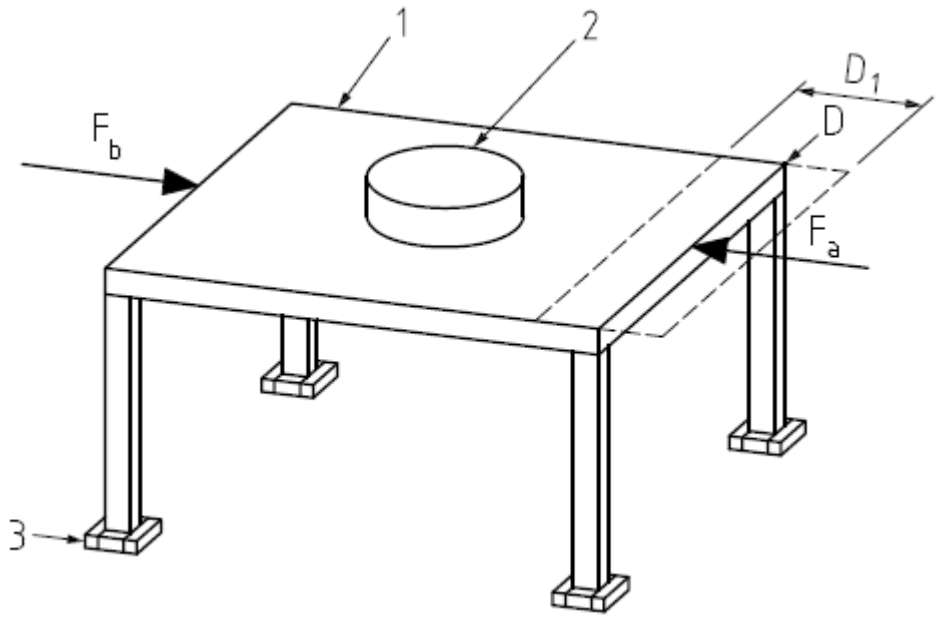

Figure 7a Longitudinal direction

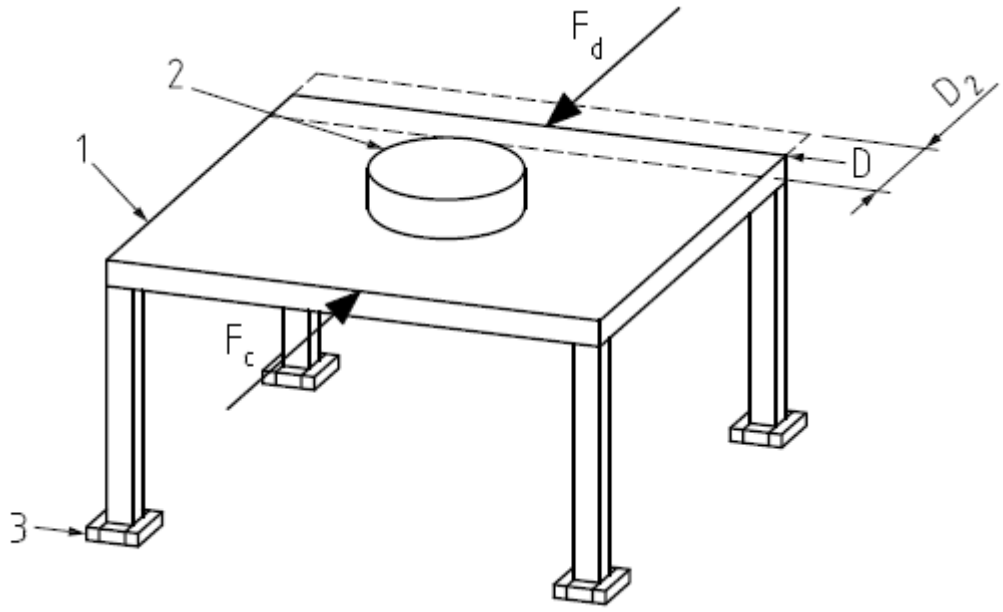

Figure 7b Transverse direction

Key

F_a force applied at point a

1 main table top

F_b force applied at point b
F_c force applied at point c
F_d force applied at point d
D measurement point
D_1 distance travelled by point D
D_2 distance travelled by point D

2 specified mass
3 stops

7.5 Vertical durability test

Position the table on the test surface in its normal position of use. Tables with extensions inserted in the centre shall be tested in the extended configuration. All other tables shall be tested without extending ancillary surfaces.

Apply the vertical force specified in the requirement document by means of the loading pad (5.4), on the table top at the most adverse position, (100 ± 10) mm from the table top edge.

If the article tends to lift, load the centre of the main table top with a mass sufficient to prevent overturning.

Carry out the test for the number of cycles specified.

7.6 Vertical impact test

7.6.1 General

Position the table on the test surface, in its normal position of use. Tables with extensions inserted in the centre shall be tested in the extended configuration. All other tables shall be tested without extending ancillary surfaces.

7.6.2 Vertical impact test for table tops

Place one layer of foam (5.5) on the table top.

The height of drop shall be measured from the position where the impactor is resting on the surface of that layer of foam. Place a second layer of foam (5.5) between the striking surface and the table top.

Allow the vertical impactor (5.1) to fall freely from the height specified in the requirement document onto the foam surface at the following positions:

— As close as possible to one point of support of the top but not less than 100 mm from any edge;

— (100 ± 10) mm from the edge of the top as far away from the supports as possible;

— (100 ± 10) mm from the edges at one corner.

7.7 Deflection of table tops

Position the table on the test surface, in its normal position of use. Tables with extensions inserted in the centre shall be tested in the extended configuration. All other tables shall be tested without extending ancillary surfaces.

Testing of the deflection of table tops that are not made of metal, glass, shall be carried out in a relative humidity as specified in 4.1.

The greatest deflection shall be measured and recorded with reference to a straight line to an accuracy of ± 0,1 mm. Place the table being tested on the floor surface (5.2). Load the table top with a uniformly distributed load as specified and apply for:

— One hour for table tops made of metal, glass and stone;

— One week for all other table tops

With the load remaining on the top, measure and record the deflection at a point (50 ± 5) mm from an edge where the deflection is greatest, with reference to a straight edge placed along and extending the entire length or diameter of the table top. The deflection is the difference in height between the initial unloaded state and the final state under load.

7.8 Durability of tables with castors

This test is only applicable to tables that have castors fitted to all legs/supports.

Tables shall be tested without extending or inserting ancillary surfaces.

Place the table on the floor surface (5.2).

Apply the specified load, centered on the table.

The castors shall be free to rotate and swivel.

The operating force shall be applied not lower than 50 mm from the top surface of the table.

At least one castor shall be run over obstacles (5.8) at a mean speed of 0,2 m/s for a distance of at least one metre.

At the end of (1 ± 0.05) metre the direction of travel shall be reversed and the castor shall return to the starting point. This cycle shall be repeated until the castors have been running for at least 2 min.

There shall be a cooling period of at least 2 min before the next test run is started. 1500 cycles shall be run, one cycle consisting of one movement forward and one backward.

Inspect the castors and the structure for damage affecting the function.

7.9 Drop test

Place the table unloaded on the floor surface (5.2), in its normal position of use, without ancillary surfaces inserted or extended, but with ancillary surfaces in their normal stored position. Height adjustable tables shall be set to their lowest position.

Determine the drop height as a percentage of the specified nominal drop height in accordance with Table 1.

The vertical force is determined as the lowest upwards vertical force to lift at least one leg/support off the floor (10 ± 5) mm off the floor.

For tables that have a single leg/support the vertical force is determined as the lowest upwards vertical force to lift the edge of the support (10 ± 5) mm off the floor.

Table 1 – Determination of drop height

Vertical force	% of specified nominal drop height
0 N - < 200 N	50
200 N – 400 N	$100-[70\ x\ \frac{[Force\ to\ lift\ one\ end\ of\ unit-200]}{200}]$
> 400 N	30

Determine and record the most likely lifting point(s).

Lift the table at the point used to determine the vertical force to the drop height and let it drop freely onto the floor surface (5.2).

Carry out the test 100 times. Height adjustable tables shall be tested three times at the lowest position and three times at the highest position.

8 Test procedures – Stability

8.1 General

Unless otherwise specified, the tests shall be carried out in the configuration most likely to cause overturning.

Where the table top can be extended, and the smallest dimension of the unextended table top is less than 300 mm, then the extended configuration shall be considered most likely to cause failure. In this case, the extended configuration is considered as the main surface.

Levelling devices shall be set as near as possible to 5 mm from the fully open position whilst ensuring the table top is parallel to the floor.

If a test cannot be carried out as specified in this standard, e.g. because a loading pad cannot be used for the application of a force due to the design of a product, the test shall be carried out as far as possible as specified.

With the exception of 7.3, tables supplied with storage features shall be tested with no load in the storage item.

8.2 Stability under vertical load

8.2.1 General

Tables that can be set to heights both above and below 950 mm shall be tested to both 7.2.2 and 7.2.3.

8.2.2 Test for tables that are or can be set to a height of 950 mm or less

The table shall be set to the height most likely to overturn the table, but not more than 950 mm.

Measure the longest dimension of the table top (L). Apply the specified vertical load (V), determined from Table 2.

A graphical representation of Table 2 is shown in Figure 8.

The vertical load shall be applied (50 ± 5) mm from the outer edge of the table top (see Figure 9) on that side where the load is most likely to cause overturning as far away from the supports as possible.

Where there are multiple positions that may cause overturning the test should be repeated at each position.

Table 2 — Determination of vertical load

Longest dimension, L, of the table top in the overturning direction	Vertical load V
0 mm - < 800 mm	V_1
800 mm – 1 600 mm	$V_2 - (V_2 - V_1) \times \frac{(1600 - L)}{800}$
> 1 600 mm	V_2

All dimensions in millimetres

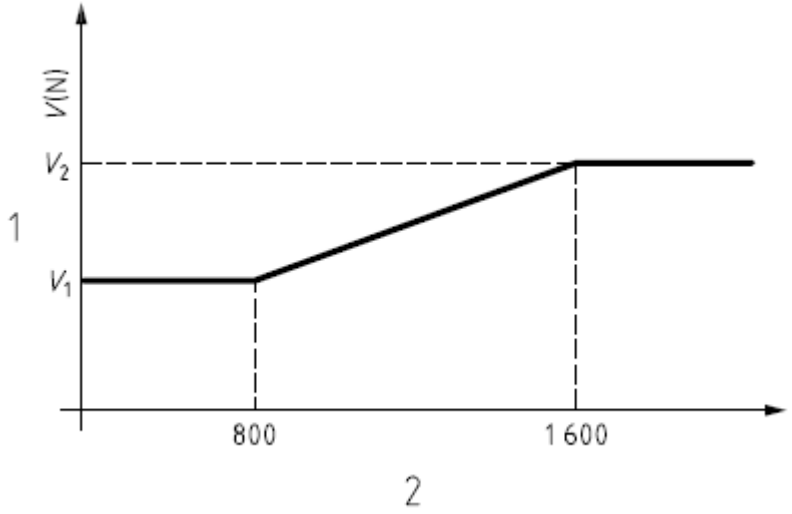

Key

1 Vertical force (V) in N

2 Longest dimension of the table top in mm

V_1 Minimum vertical force

V_2 Maximum vertical force

Figure 8 — Determination of vertical load

All dimensions in millimetres

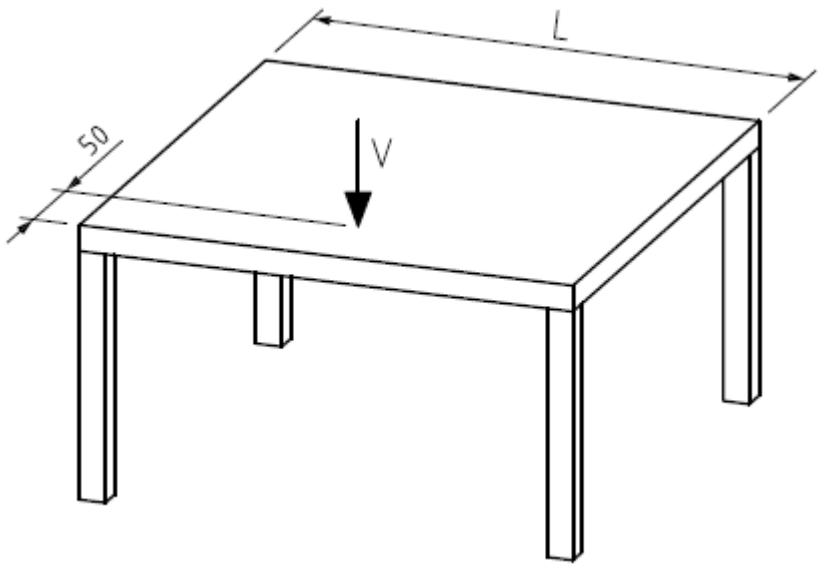

Key

L longest dimension of table top
V vertical load

Figure 9 — Vertical stability test

8.2.3 Test for tables that are or can be set to a height greater than 950 mm

The table shall be set to the height most likely to cause overturning, but not less than 950 mm.

The table shall not overturn when tested according to 7.2.2 using 50 % of the specified vertical load (V) determined from table 2.

Where there are multiple positions that may cause overturning the test should be repeated at each position.

8.3 Stability for tables with extension elements

Load each extension element with the load specified.

For tables with extension elements not fitted with interlocks, open all extension elements in the least favourable combination. For tables with extension elements fitted with interlocks, open the two extension elements with the largest loads without overriding the interlock. If an interlock device prevents any two of the extension elements from being opened simultaneously, open the extension element with the largest load.

The table shall not overturn when the specified vertical force is applied at the centre of the front of the table, through a loading pad (5.4), (50 ± 5)mm from the edge.

8.4 Stability of tables designed to support a parasol

This test does not apply if the table shall be used with parasols that are fitted with their own bases.

Secure the test tube (5.6) in the table's fixture for holding parasols.

Apply the specified horizontal force F at a height h of (2.200 ± 20) mm. Figure 10 shows an example of a table where the structure is intended to support a parasol.

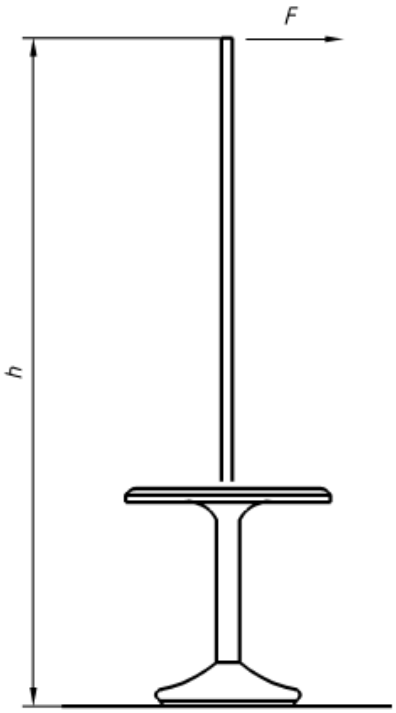

Key

F horizontal force
h height

Figure 10 — Stability of tables where the structure is intended to support a parasol

Bibliography

[1] ISO/DIS 19682, Furniture — Tables — Test methods for the determination of stability, strength and durability, 2015

[2] EN 1730: 2012, Furniture – Tables – Test methods for the determination of stability, strength and durability

Price based on 27 pages