DEAS1017-5:2019

ICS 91.140.70

DRAFT EAST AFRICAN STANDARD

Sanitary appliances (vitreous china) — Specification — Part 5: Urinals and partition plates

EAST AFRICAN COMMUNITY

© EAC 2019

1st Edition 2019

Copyright notice

This EAC document is copyright-protected by EAC. While the reproduction of this document by participants in the EAC standards development process is permitted without prior permission from EAC, neither this document nor any extract from it may be reproduced, stored or transmitted in any form for any other purpose without prior written permission from EAC.

Requests for permission to reproduce this document for the purpose of selling it should be addressed as shown below or to EAC's member body in the country of the requester:

© East African Community 2019 — All rights reserved
East African Community
P.O. Box 1096,
Arusha
Tanzania
Tel: + 255 27 2162100
Fax: + 255 27 2162190
E-mail: eac@eachq.org
Web: www.eac-quality.net

Reproduction for sales purposes may be subject to royalty payments or a licensing agreement. Violators may be prosecuted.

 © EAC 2019 – All rights reserved

Contents

Page

Foreword iv
1 Scope 1
2 Normative references 1
3 Terms and definitions 1
4 General requirements 1
5 Dimensions and tolerances 1
6 Principles of design 3
7 Functional requirements and test methods for class 1 products 4
7.1 Depth of water seal 4
7.2 Flushing requirements 4
7.2.1 Wash of bowl 4
7.2.2 Flushing of three plastics balls 5
7.2.3 Oversplashing 5
7.2.4 Discharge 5
7.3 Water absorption 5
7.4 Load resistance 5
7.5 Durability of class 1 products 6
7.6 Test methods 6
7.6.1 Testing the depth of water seal and flushing tests 6
7.6.2 Determination of water absorption 7
7.6.3 Static load test 8
8 Functional requirements and test methods for class 2 products 8
8.1 Depth of water seal 8
8.2 Cleanability 9
8.3 Load resistance 9
8.4 Durability of class 2 products 9
8.5 Test methods 9
8.5.1 Depth of water seal 9
8.5.2 Cleanability 9
9 Finish 9
10 Sampling, process inspection and lot inspection 9
11 Marking 9
ANNEX A 11
ANNEX B 12
B.1 General 12
B.2 Procedures 12
ANNEX C 16
C.1 General 16
C.2 Procedures 16
Bibliography 18

© EAC 2019 – All rights reserved

Foreword

Development of the East African Standards has been necessitated by the need for harmonizing requirements governing quality of products and services in the East African Community. It is envisaged that through harmonized standardization, trade barriers that are encountered when goods and services are exchanged within the Community will be removed.

The Community has established an East African Standards Committee (EASC) mandated to develop and issue East African Standards (EAS). The Committee is composed of representatives of the National Standards Bodies in Partner States, together with the representatives from the public and private sector organizations in the community.

East African Standards are developed through Technical Committees that are representative of key stakeholders including government, academia, consumer groups, private sector and other interested parties. Draft East African Standards are circulated to stakeholders through the National Standards Bodies in the Partner States. The comments received are discussed and incorporated before finalization of standards, in accordance with the Principles and procedures for development of East African Standards. XXXXXX.

East African Standards are subject to review, to keep pace with technological advances. Users of the East African Standards are therefore expected to ensure that they always have the latest versions of the standards they are implementing.

The committee responsible for this document is Technical Committee EASC/TC 037, *Utensils, cutlery, Sanitary wares and fittings and domestic hardware*

Attention is drawn to the possibility that some of the elements of this document may be subject of patent rights. EAC shall not be held responsible for identifying any or all such patent rights.

© EAC 2019 – All rights reserved

Sanitary appliances (vitreous china) — Specification — Part 5: Urinals and partition plates

1 Scope

The draft East African Standard specifies requirements for dimensions, performance, principles of design and test methods for wall-hung urinals.

2 Normative references

The following documents are referred to in the text in such a way that some or all of their content constitutes requirements of this document. For dated references, only the edition cited applies. For undated references, the latest edition of the referenced document (including any amendments) applies.

DEAS 1017-1:2019*, Sanitary appliances (Vitreous china) — Part 1: General requirements*

DEAS 1017-2:2019, *Sanitary appliances (Vitreous china)— Specification — Part 2: Wash down water closets*

3 Terms and definitions

For the purposes of this document, the terms and definitions given in DEAS 1017-1:2019 apply.

4 General requirements

The general requirements relating to terminology, material, and defects minimum thickness, tolerances and performance covered in DEAS 1017-1:2019 shall apply.

5 Dimensions and tolerances

5.1 The connecting dimensions are given in Table 1 and Figure 1,2,3,4.

Note Connecting dimensions are vital for the functioning and interchangeability of the system.

© EAC 2019 – All rights reserved

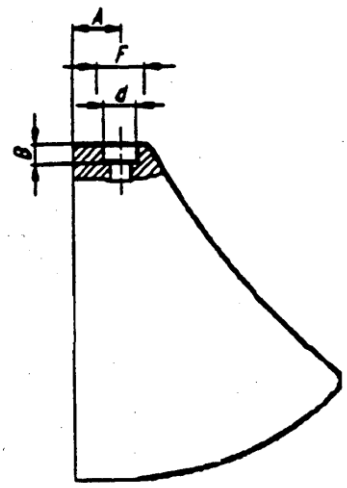

Figure 1 — Wall-hung urinal with inlet from above

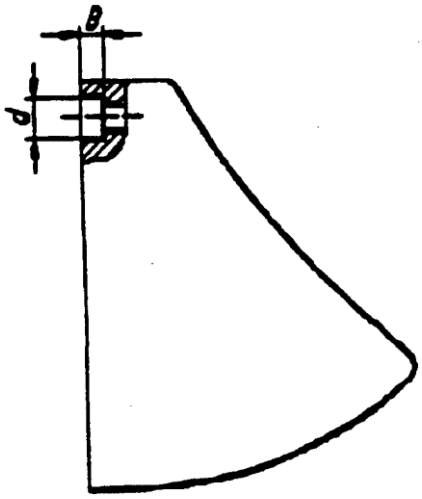

Figure 2 — Wall-hung urinal with back inlet

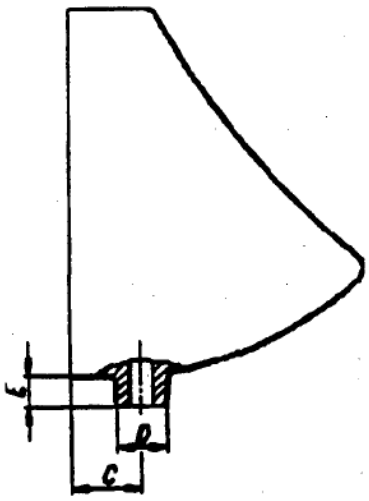

Figure 3 — Wall-hung urinal with vertical outlet

© EAC 2019 – All rights reserved

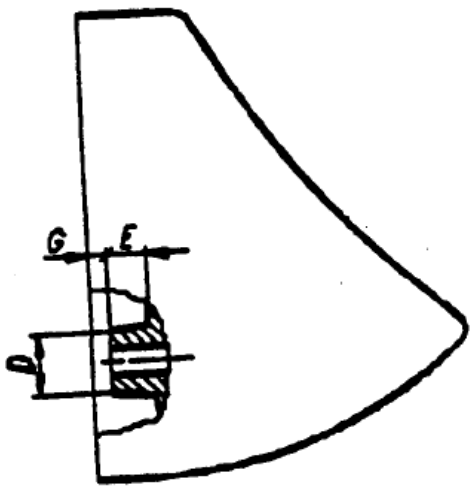

Figure 4 — Wall-hung urinal with horizontal outlet

Table 1 — Connecting dimensions of wall-hung urinals

Description	Symbol	Dimensions (mm)
Distance between the centre line of the inlet and the back wall of the urinal	A	50 ± 5
Depth *of* the internal cylindrical pari in front of the shoulder	B	≥ 20
Distance between the centre of the waste outlet hole and the back wall of the urinal	C	65 ± 5
		145 ± 5
Internal diameter of the inlet	d	35 ± 2
External diameter of the outlet	D	50 ± 2
External cylindrical part of the outlet without grooves	E	≥ 30
Diameter of the plane circular surface around the inlet	F	≥ 50
Distance to the vertical plane of outlet from the backwall of urinal	G	15 ± 10
		≥ 42

6 Principles of design

6.1 General

6.1.1 Bowl urinals shall be of one-piece construction.

6.1.2 Wall-mounted bowl urinals shall either be flat back or angle-back and shall have an integral flushing box rim with minimum 12 holes well distributed in the rim to ensure satisfactory flushing. It shall have an integral outlet and overflow.

6.1.3 Wall-hung urinals in accordance with Table 2 shall meet the following requirements:

a) for connection to supply and drainage systems the connecting dimensions shall be in accordance with Table 1 or the manufacturer shall provide or recommend necessary auxiliary components;

b) wall-hung urinals shall function with flushing device(s) supplying flushing volumes and/or flow rates as specified by the manufacturer in accordance with Table 3

© EAC 2019 – All rights reserved

6.1.4 Wall-hung urinals are classified as described below:

a) Class 1 : Wall-hung urinals intended to be installed in drainage systems of type I, II or IV
b) Class 2 : Wall-hung urinals intended to be installed in drainage systems of type III

Table 2 — Types of wall-hung urinals

Type	Construction
I	Siphonic action urinal with flushing rim and with integral trap or with dedicated trap specified by the manufacturer
II	Wash-down urinal with or without flushing rim and with integral trap or with dedicated trap specified by the manufacturer
III	Wash-down urinal with or without flushing rim and without dedicated trap
IV	Urinal of type I, II or III with dedicated flushing device specified by the manufacturer

6.2 Flushing volume and flow rate

The flushing volumes and flow rates for particular flushing devices shall be as given in Table 3.

Table 3 — Flushing devices, volumes and flow rate

Type of urinal	**Flushing device for testing**			
	Flush valve (C) in accordance with Annex A		**Manually operated flushing cistern (A) in accordance with annex B**	**Automatic flushing cistern (B) in accordance with Annex C**
	Flushing volume l	Flow rate l/s	Flushing volume l	Flushing Volume l
I	0.5-5.0 (inclusive)	$0{,}5^{+0{,}1}_{-0{,}2}$	0.5-5.0 (inclusive)	–
II		$0{,}2^{+0{,}2}_{-0{,}1}$		
III		≤ 0.2		0.5-4.5 (inclusive)
IV		$0{,}5^{+0{,}1}_{-0{,}4}$		

7 Functional requirements and test methods for class 1 products

7.1 Depth of water seal

When tested as described in 7.6.1.2, the depth of water seal in urinals of types I and II shall be not less than 50 mm. Ensure that the trap will be re-filled up to not less than 50 mm. Traps in accordance with DEAS 1017-2:2019 are exempted from this test.

7.2 Flushing requirements

7.2.1 Wash of bowl

When tested as described in 7.6.1.3.1, the arithmetic average of any un-flushed area of the surface to be tested shall not be greater than 8000 mm^2 after five flushing operations.

The surface to be tested is defined as described below:

© EAC 2019 – All rights reserved

a) for urinals with flushing rim: the area below the flushing rim and above the water surface in the trap;

b) for urinals without flushing rim: the surface enclosed by

   i. an angle of 25 ° on the surface of urinal beginning from the central point of the water inflow and

   ii. a line in a distance of 80 mm from the edge of the bowl (see Figure 2).

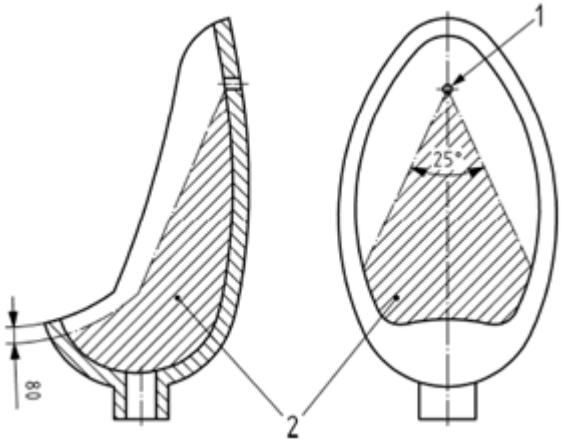

Key
1 spreader or central inlet hole
2 surface to be tested

Figure 5 — Surface to be tested for urinals without flushing rim flushed by a spreader or inlet holes

7.2.2 Flushing of three plastics balls

When tested as described in 7.6.1.3.2, at least two plastics balls shall be flushed out of the trap of the urinal in each of five separate flushing operations with three balls.

When tested as described in 7.6.1.3.2, type I urinals shall flush with a siphonic action when not connected to the drainage pipe. Urinals of types II and III are excluded from this test.

7.2.3 Oversplashing

When tested as described in 7.6.1.3.3, the flushing water shall not splash beyond the edge of the bowl and wet the floor. Only a few small drops on the floor are permissible.

7.2.4 Discharge

When tested as described in 7.6.1.3.4, no flushing water shall run over the rim of the bowl.

7.3 Water absorption

When tested as described in 7.6.2, the arithmetic average for water absorption of glazed ceramic urinals shall not exceed 0.75 % by mass where no individual value shall exceed 1.00 %.

7.4 Load resistance

When tested in accordance with 7.6.3, the wall-hung urinal shall not crack, become detached from the wall or show permanent distortion.

© EAC 2019 – All rights reserved

7.5 Durability of class 1 products

Class 1 products conforming with the requirements of 7.1 to 7.4 shall be deemed to be durable.

7.6 Test methods

7.6.1 Testing the depth of water seal and flushing tests

7.6.1.1 General

For testing the depth of water seal and flushing requirements with the device(s) indicated by the manufacturer, i.e. a flush valve in accordance with Annex A and/or with a flushing cistern in accordance with either Annex B or C, install the urinal to be tested in accordance with the manufacturer's instructions on a firm flat vertical surface and connect the water inlet and the trap.

The flow rate shall be adjusted in accordance with the manufacturer's specification.

7.6.1.2 Depth of water seal

Fill the trap with water by flushing twice. After the second flush, check that the trap complies with 7.1.

7.6.1.3 Flushing tests

7.6.1.3.1 Sawdust test

7.6.1.3.1.1 Test apparatus

For urinals without rim, a template made of a flexible sheet in accordance with Figure 6.

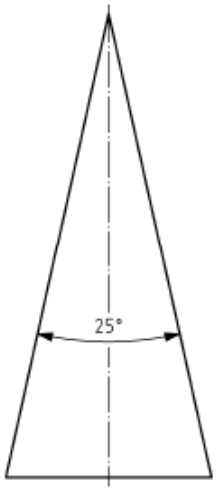

Figure 6 — Template for testing urinals without flushing rim

7.6.1.3.1.2 Test material

20 g of fine dry wood sawdust.

7.6.1.3.1.3 Method

For urinals without rim draw the perimeter of the surface to be tested (see Figure 5) using the template and a water resistant ink.

© EAC 2019 – All rights reserved

Moisten the surface to be tested of all types of urinals. Immediately afterwards, sprinkle the sawdust as completely and evenly as possible over the moistened surface.

Flush the urinal with the flushing volume and/or flow rate indicated by the manufacturer and measure any un-flushed area of the surface to be tested.

Perform this procedure five times and check the compliance with 7.2.1.

7.6.1.3.2 Flushing of three plastics balls

7.6.1.3.2.1 Test material

Three balls of non-absorbent material, e.g. polyethylene, each having a mass of (3.7 ± 0.2) g and a diameter of (20 ± 0.2) mm.

7.6.1.3.2.2 Method

For each flushing operation place the three balls into the urinal. Without the urinal being connected to a drainage pipe, flush the urinal with the flushing volume and/or flow rate specified by the manufacturer. Verify that the balls are flushed out of the trap of the urinal. Remove any balls left in the urinal or its trap.
Perform the test five times, checking for compliance with the requirements of 7.2.2 each time.

7.6.1.3.3 Oversplashing test

Using the flushing device(s) with the maximum volume for flushing cistern and maximum flow rate for flush valve in accordance with Table 3, flush the urinal and record any visible evidence of water on the floor in the area below.

7.6.1.3.4 Discharge

The test is made with the maximum flow rate in accordance with Table 3 for a minimum of 2 min in the case of a flush being provided by a flush valve, and with the maximum flushing volume in accordance with Table 3 in the case of a flush being provided by a flushing cistern in accordance with 7.2 (table 5). Record any evidence of water flowing over the rim of the bowl.

7.6.2 Determination of water absorption

7.6.2.1 Test apparatus

a) balance accurate to 0.05 g;

b) oven controlled at a test temperature of (105 ± 2) °C;

c) desiccator with fresh prepared silica gel;

d) chamois leather and a fine brush;

e) heated bath with constant water level;

f) deionised water;

g) pair of fine tweezers.

7.6.2.2 Method

a) Break three samples glazed on one face from the urinal. The unglazed surface area of the samples shall be approximately 30 cm^2 and the thickness shall be not greater than 12 mm including the glaze.

b) Dry the samples at a temperature of 105 °C for (180 ± 5) min.

c) Allow the samples to cool in the desiccator.

© EAC 2019 – All rights reserved

d) Weigh each sample to an accuracy of 0.05 g; this mass is m_0.

e) Using the fine tweezers place the samples in the bath and fill with deionised water. Ensure they do not touch the sides or the bottom of the bath.

f) Heat the water to boiling point for (120 ± 5) min. At the end of this period stop the heating procedure and leave the samples immersed for a further (20 ± 1) h.

g) Using the fine tweezers take the samples from the water and dry them immediately with the slightly dampened chamois leather. Any cavities or holes shall be dried using the fine brush.

h) Weigh each sample immediately; this mass is m_1.

i) Calculate for each sample its water absorption WA in percentage using Equation (1):

$$WA = \frac{m1 - m0}{m0} 100 \qquad \ldots 1)$$

7.6.3 Static load test

Install the urinal in accordance with the manufacturer's instructions onto a smooth vertical surface with a layer of mortar or other facing material used for pointing between the back of the urinal and the smooth surface. A vertical force of (1.00 ± 0.01) kN shall be applied for a period of 1 h on the middle of the front edge (see Figure 7).

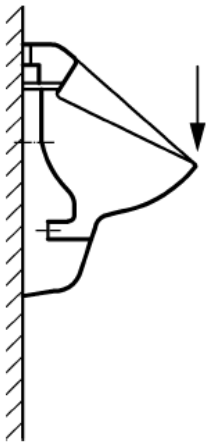

Figure 6 — Load test

8 Functional requirements and test methods for class 2 products

8.1 Depth of water seal

When tested as described in 8.5.1, the depth of water seal of urinals of types I, II and IV shall be not less than 75 mm. Ensure that the trap will be re-filled up to not less than 75 mm.

Note Traps in accordance with DEAS 1017-2:2019 are exempted from this test.

© EAC 2019 – All rights reserved

8.2 Cleanability

When tested in accordance with 8.5.2, wall-hung urinals shall have smooth and readily cleansed non-absorbent functional surfaces which are free from acute internal corners which would be difficult to clean, i.e. surfaces intended to or likely to come into contact with water and/or urine during use and cleaning.

NOTE Functional surfaces do not include inlet and outlet holes, outlet grills etc.

8.3 Load resistance

When tested in accordance with 7.6.3, class 2 products shall meet the requirements of 7.4.

8.4 Durability of class 2 products

Class 2 products conforming the requirements of 8.1 to 8.3 shall be deemed to be durable.

8.5 Test methods

8.5.1 Depth of water seal

Install the urinal to be tested as described in 7.6.1.1.

Fill the trap with water by flushing twice. After the second flush check the compliance with 8.1.

8.5.2 Cleanability

Visually examine the functional surfaces of the wall-hung urinals using a suitable light source.

Record any failure to comply with 8.2.

Imperfections that do not affect the functionality of the surface shall not constitute a failure.

9 Finish

Inside and outside visible surfaces of urinal shall be glazed, uniform and smooth. The finish shall ensure efficient flush. The inside surface of the inlet and outlet not visible shall be smooth but not glazed.

10 Sampling, process inspection and lot inspection

The recommended method of sampling, process inspection and lot inspection of urinals shall be as given in DEAS 1017-2:2019.

11 Marking

Urinals shall be clearly and indelibly marked at a suitable place as per table 4 and with the following:

a) name or trade mark of the manufacturer; and

b) batch or lot number.

© EAC 2019 – All rights reserved

Table 4 — Characteristics and abbreviations for used in marking

CD/UG/06	Number of East African Standard for wall-hung urinals for product description
I	Type I urinal in accordance with Table 2
II	Type II urinal in accordance with Table 2
III	Type III urinal in accordance with Table 2
IV	Type IV urinal in accordance with Table 2
(X)	Flushing volume/flow rate specified by the manufacturer
A	Manually operated flushing cistern
B	Automatic flushing cistern
C	Flush valve
CA	Cleanability
BP	Backflow prevention (foul air)
LR	Load resistance
DA	Durability

© EAC 2019 – All rights reserved

ANNEX A

(normative)

Test rig for urinals intended to be flushed by a flush valve

For testing the flushing performance of a urinal intended to be flushed by a flush valve a test rig in accordance with Figure A.1 shall be used.

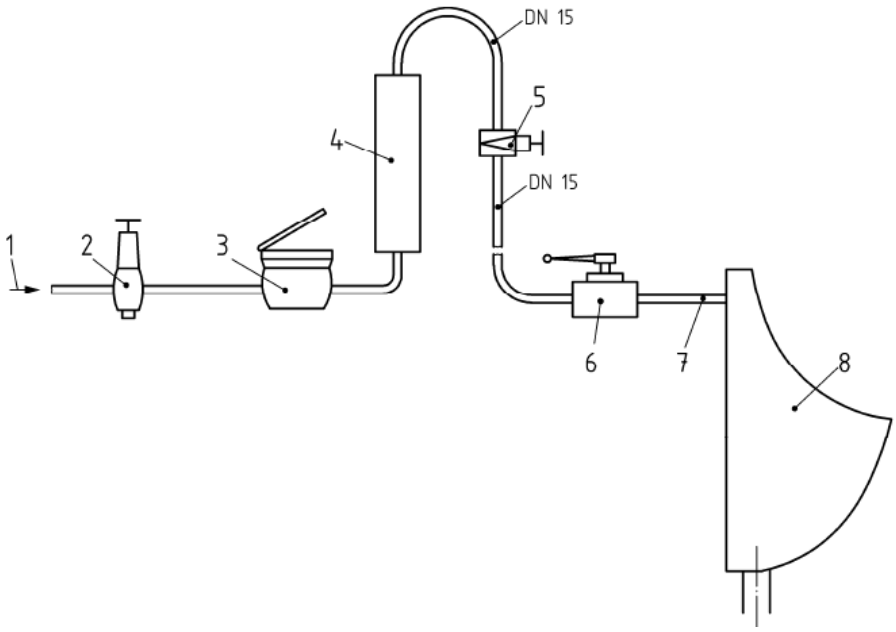

Figure A.1 — Test rig

For testing urinals with a dedicated flushing device the items 5, 6 and 7 of test rig given in Figure A.1 are to be omitted.

NOTE It is advisable to adjust the flushing volume by means of a time relay at the automatic magnetic interrupter.

© EAC 2019 – All rights reserved

ANNEX B

(normative)

Test rig for urinals intended to be flushed by a manually operated flushing cistern

B.1 General

For testing the flushing performance of a urinal intended to be flushed by a manually operated flushing cistern a test rig in accordance with Figure B.1 shall be used.

B.2 Procedures

The procedures A) and B) shall be carried out successively.

A) Procedure to test the flush rate of the flushing cistern

a) Insert the restrictor (see Figure B.4) into the flush pipe as shown in Figure B.1.

b) Fill the cistern to the water level of 5.0 l and mark it.

c) Start the flushing operation.

d) Add 0.5 l of water to the residual water and mark the lower measuring point.

e) Add a further 1.0 l water (volume for flush rate measurement) and mark the upper measuring point.

f) Add water to reach the urinal flushing water level of 5.0 l.

g) Flush the cistern and measure the flow rate during delivery of the 1.0 l flushed between the upper and lower measuring points. The arithmetic average of flow rate of five flushing operations shall be (0.5 ± 0.1) l/s.

B) Procedure to test the urinal

a) Remove the restrictor (item 5 in Figure B.1) from flush pipe (item 6 in Figure B.1).

b) Connect the urinal to be tested to the flush pipe.

c) Fill the flushing cistern to the water volume prescribed by the manufacturer of the urinal and mark it.

d) Perform the tests as specified in Clause 6 with the flushing volume prescribed by the manufacturer of urinal.

© EAC 2019 – All rights reserved

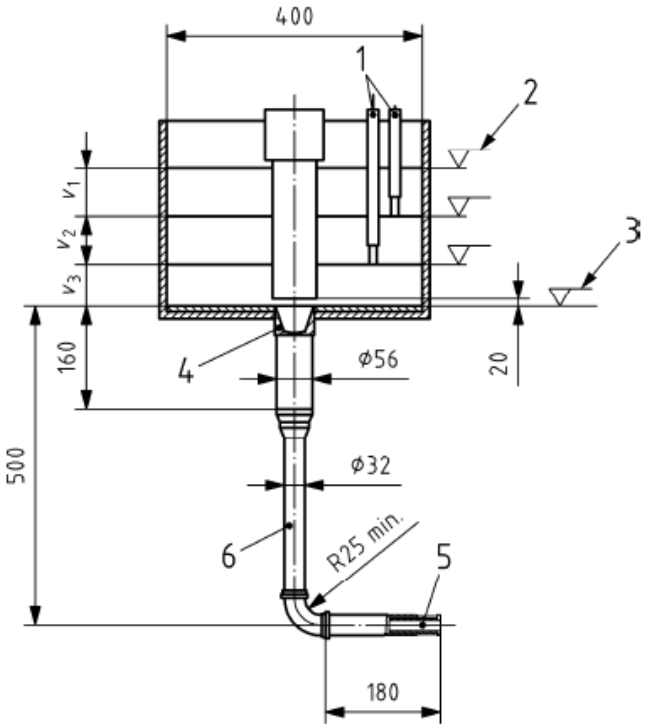

Key

1 upper and lower water level sensors connected to a level control unit and an electronic timer
2 nominal water level (5 l)
3 residual water level
4 outlet valve (see Figure B.3)
5 restrictor (see Figure B.4)
6 polyethylene flush pipe, wall thickness 3 mm
V_1 starting volume
V_2 measuring volume (1 l)
V_3 finishing volume (0.5 l)

Figure B.1 — Test rig for flushing cisterns

© EAC 2019 – All rights reserved

Dimensions in millimeters

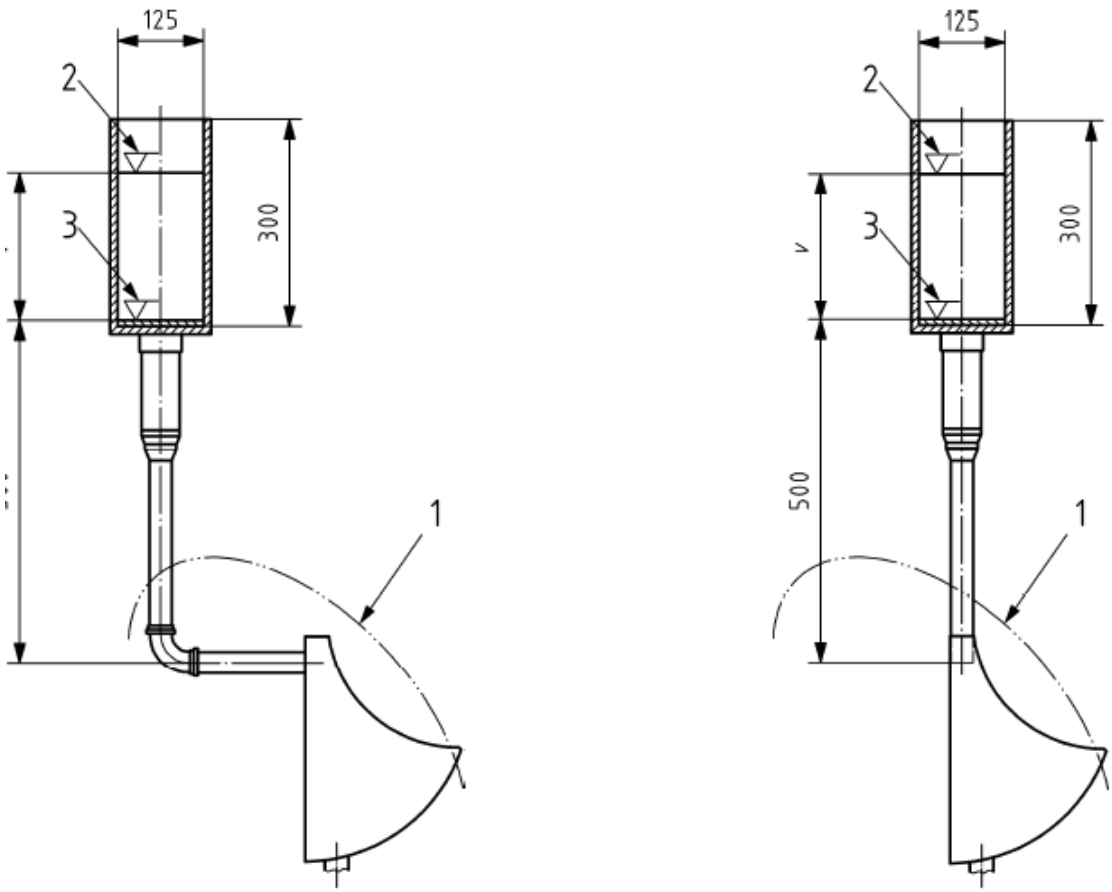

Key

1 to be defined by manufacturer
2 nominal water level
3 residual water level
V flushing volume

Figure B.2 — Testing with urinal

Dimensions in millimeters

© EAC 2019 – All rights reserved

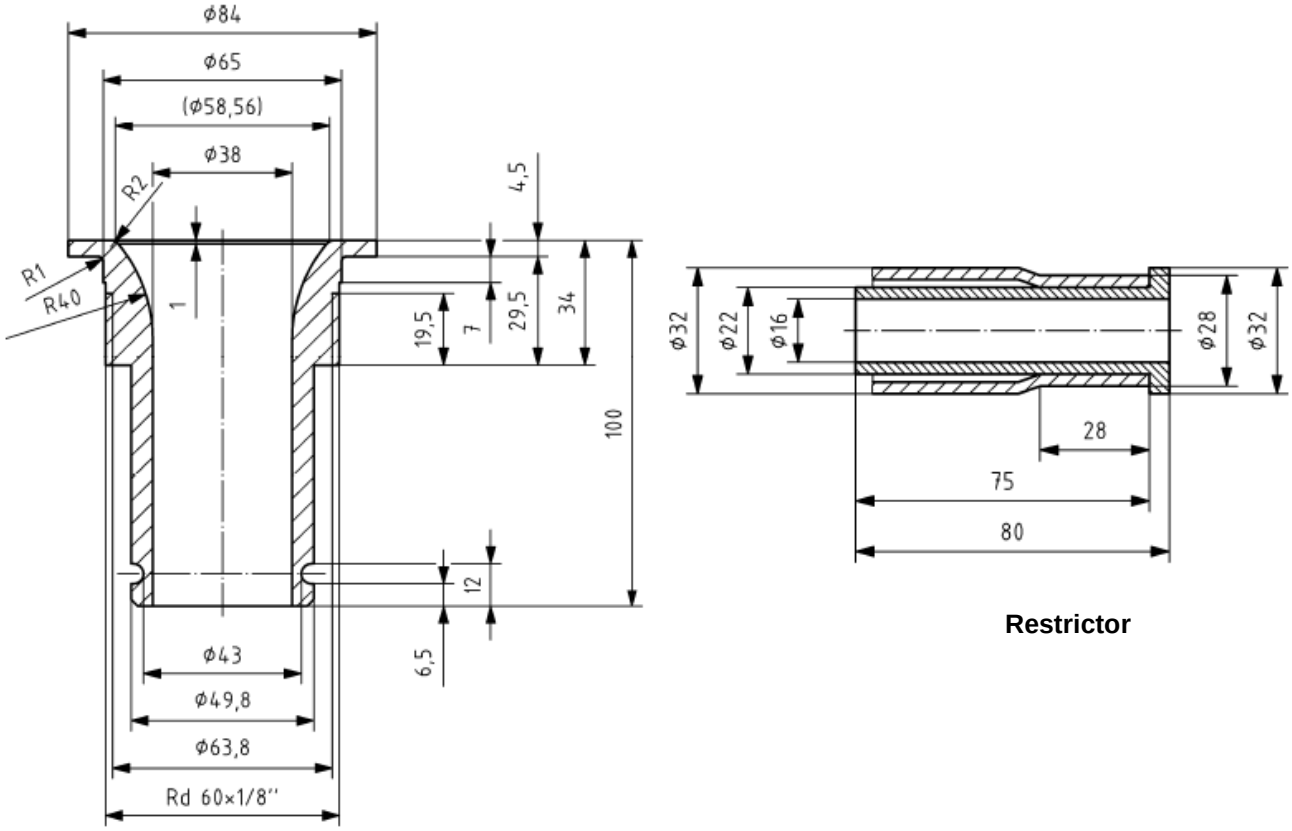

Figure B.3 — Test flushing cistern outlet with integral connection for flush pipe

© EAC 2019 – All rights reserved

ANNEX C
(normative)
Test rig for urinals intended to be flushed by an automatic flushing cistern with valve-less outlet device

C.1 General

For testing the flushing performance of single urinals operated by automatic flushing cistern with valve-less outlet device, a test rig in accordance with Figure C.1 shall be used.

C.2 Procedures

The procedures A) and B) shall be carried out successively:

A) Procedure to test the flow rate of the automatic flushing cistern:

a) Assemble the automatic flushing cistern, which shall deliver a flush volume as specified by the manufacturer of the urinal to be tested, and the flush pipe as shown in Figure C.1.

b) Fill the cistern slowly, until a flush occurs automatically.

c) Repeat the procedure three times, measuring the flush volume on each occasion, and calculate the average.

d) Fill the cistern again and record the time from the beginning of the flush.

e) Record the time taken for the flush to be completed.

f) Repeat steps 4) and 5) three times.

g) The flow rate average of three flushing operations shall be not less than 0.5 l/s.

B) Procedure to test the urinal:

a) Connect the urinal to be tested to the flush pipe using a spreader as instructed by the manufacturer.

b) To initiate a flush, fill the cistern to the level at which a flush occurs automatically.

c) Perform the flushing tests as specified in 7.5.1 with the flushing volume prescribed by the manufacturer of the urinal.

© EAC 2019 – All rights reserved

Dimensions in millimeters

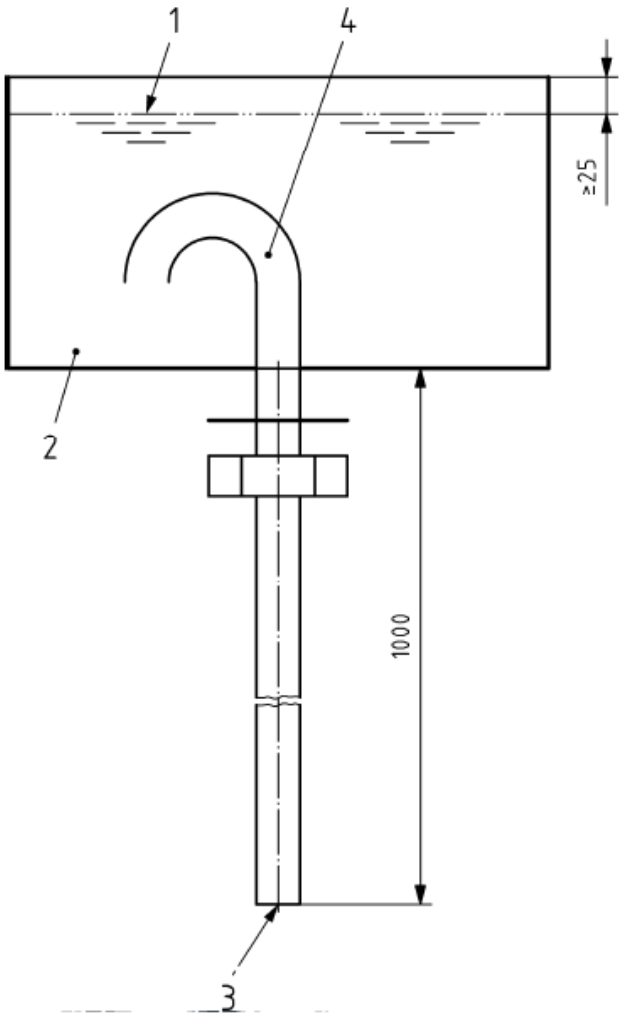

Key

1 maximum water level

2 flushing cistern sized to deliver a nominal flush of 4.5 l or a volume recommended by the manufacturer of the urinal to be tested

3 flow rate at open end of pipe to be not less than 0.5 l/s

4 valve-less outlet device constructed so that water can only discharge during a flush

Figure C.1 — Test rig for automatic flushing cistern with valve-less outlet device

© EAC 2019 – All rights reserved

Bibliography

[1] IS 2556-6:1995, *Vitreous sanitary appliances (vitreous china) — Part 6: Specific requirements of urinals and partition plates*

[2] BS EN 13407: 2006, *Wall-hung urinals — Functional requirements and test methods*

[3] BS EN 80:2001, *Wall-hung urinals. Connecting dimensions*

© EAC 2019 – All rights reserved

© EAC 2019 – All rights reserved