DRAFT TANZANIA STANDARD

Textiles – Web lashing belt made from man-made fibres – Specification

TANZANIA BUREAU OF STANDARDS

Foreword

This Draft Tanzania Standard is being developed by the Yarns and Twines Technical Committee under supervision of the Textile and Leather Divisional Standards Committee, and it is in accordance with the procedures of the Tanzania Bureau of Standards.

In the preparation of this Draft Tanzania Standard, assistance has been obtained from the following standards:

> BSEN 12195-2:2001 Load restraint assemblies on road vehicles - Safety - Part 2: Web lashing made from man-made fibres
>
> IS 15041:2001 Textiles – Flat woven webbing slings made from fibres for general services.

In reporting the results of a test or analysis made in accordance with this Draft Tanzania Standard if the final value, calculated or observed is to be rounded off, it shall be done in accordance with TZS 4 *Rounding off numerical values*

1. Scope

This Draft Tanzania Standard specifies basic characteristics, requirements, test method and sampling of web lashing made from man-made synthetic fibers (Polyamide, Polyester and Polypropylene) with flat woven webbings for lifting purposes and the safe surface transport of goods on road vehicles.

2. Normative reference

For the purpose of this Draft Tanzania Standard, the following references shall apply. For dated references, only the edition cited applies. For undated references, the latest edition of the referenced document (including any amendments) applies:

TZS 3*, Atmospheric conditions for testing*.

TZS 4*, Rounding off numerical values.*

TZS 22, *Textiles – Woven fabrics –Determination of breaking load and extension.*

TZS 44, *Textiles – Woven or knitted fabrics – Determination of length and width.*

TZS 326, *Textiles – Ternary fibre mixtures – Quantitative chemical analysis.*

TZS 327, *Textiles – Binary fibre mixtures – Quantitative chemical analysis.*

3. Terms and definitions

For the purpose of this Draft Tanzania Standard, the following definitions shall apply:

3.1 lashing equipment

device designed to be attached to the lashing points in order to secure the cargo on road vehicle. It consists of tensioning elements (e.g. webbing, chain, wire rope), tensioning devices (e.g. wrench, ratchet, spanner, tension jack) and connecting components, if required (e.g. hook, terminal jack).

3.2 web lashing

means of securing which consists of tensioning device or a tension retaining device and flat woven textile webbing with or without end fittings.

3.3 load restraint assembly

systems and devices for the securing of loads.

3.4 woven webbing

part of the sling comprising a woven narrow fabric generally of a coarse weave and multiple plies, the prime function of which is load bearing.

3.5 end fitting

device connecting the means of web lashing or the tensioning device with the lashing point of the vehicle or the attachment point of the load.

3.6 flat woven webbing sling

woven narrow fabric, generally with multiple plies and narrow fabric selvedges which it's prime function is load bearing.

3.7 tensioning device

mechanical device inducing and maintaining a tensile force in a load restraint assembly.

3.8 single part web lashing
web lashing which comprises only one flat woven textile webbing and a tensioning device with end fittings.

3.9 two-piece web lashing
web lashing which comprises two woven textile webbings, one with a tensioning device, both with one end fitting.

3.10 length l_G
length of a one-piece web lashing measured from the free end of the webbing to the outer turning radius of its connection to the tensioning device.

3.11 combined lashing
device for securing a load, consisting of a tensioning device and a textile webbing combined with chains or steel wire ropes with or without end fittings.

3.12 lashing point
securing device on a vehicle to which a lashing may be directly attached.

3.13 coefficient of utilization
ratio of minimum breaking force $\mathbf{BF_{min}}$ to the lashing capacity LC.

3.14 lashing capacity (LC)
maximum force for use in straight pull that a web lashing is designed to sustain in use.

3.15 hand operating force (H_F)
force applied to the handle which creates the tensile force in the web lashing.

3.16 standard tension force (S_{TF})
residual force after release of the handle of the ratchet

3.17 working load limit
maximum mass, in kilograms or tonnes, which the sling in basic configuration is permitted to sustain vertically.

3.18 safety factor
ratio of strength to the maximum force of utilization.

3.19 maximum force of utilization (MFU)
maximum static force, in decanewtons, that the sling in basic configuration is permitted to sustain.

3.20 mode factor (M)
factor that takes into account the geometry of the assembly, the multiplicity of parts, and empirically determined constant considerations.

3.21 maximum safe working load (maximum SWL)

mass in kilograms or tonnes, that the finished sling or sling assembly, as shown in annex B, is permitted to support after applying the mode factor to the working load limit. (Under normal condition of use, that is, not taking into consideration extreme conditions resulting, for example, from the action of extreme heat, abrasion, chemical reagents, etc.)

4 Safety Requirements

4.1 General

All load bearing parts of the complete web lashing shall show no evidence of deformation or other defects that affect the function at 1.25LC

a) The tensioning device or components with moving parts shall fully retain its function; any permanent set in the longitudinal axis of the webbing slot shall be less than 2% of the width of webbing;
b) No seam failure shall occur;
c) No slippage of the textile webbing through the tensioning device shall occur after settling.

Afterwards, it shall withstand a force that will give a coefficient of utilization of at least 2 when all parts are tested in accordance with 5.4.

4.2 Flat woven textile webbing

When loaded to LC the flat woven textile webbing shall not elongate by more than 7% when tested according to 5.3. A new unsewn textile webbing to be used in web lashings shall sustain a tension force of at least 3LC when tested according to 5.3.

4.3 Tensioning devices

4.3.1 General

There shall be no sharp edges or burrs which may come into contact with textile webbings or the operator's hands. If removable hand cranks are used they shall be secured against accidental detachment.

The backlash of the lever end of the tensioning device (in case of winches, cranks) under a tensile force shall not exceed 150mm when opened.

Tensioning devices shall be designed to exclude an unintentional release of the tension in the lashing.

With a force corresponding to 0.3LC applied to the web lashing, it shall be possible to disengage the tensioning device without tools so that it shall be re-usable after the test according to 5.5.2.

Tensioning devices based upon winch principles shall be designed in such a way that after $2^1/_4$ turns around the slotted pin, the loose end does not slide out (see Table 1).

Tensioning devices shall be in such a way that, when used as intended by the manufacturer, there are no crushing or shearing points which might lead to the operator's hands being injured.

4.3.2 Hand-operated tensioning device

4.3.2.1 General

A remaining tension of at least 0.1LC and not more than 0.5LC shall be generated in the web lashing after the standard hand force of 500N has been applied to the handle of the tensioning device. The requirement of a remaining tension of at least 0.1LC applies only for hand-operated tensioning devices, which are designed for frictional lashing to be used in web lashings with labelled S_{TF}.

The seating of a tensioning device in contact with the webbing shall be well rounded, so that when tested in accordance with clause 5:

a) there is no damage likely to affect safety to the area of textile webbing in contact with the tensioning device;
b) the tensioning device shows no sign of permanent deformation, cracks, flaws or other defects likely to affect safety when examined by a competent person.

If removable hand cranks are used they shall be secured against an unintended detachment when loaded. The tensioning device (ratchets) shall require positive action to release the tension in the web lashing. The tensioning device shall take a minimum of $2^1/_4$ turns of textile webbing around the slotted pin.

4.3.2.2 Cyclic loading test of tensioning devices and tension retaining devices

Tests on cyclic loading shall be carried out on web lashings of LC>5kN.

The web lashing shall resist 100 alternations at a frequency not higher than 0.4Hz between 0.2LC and 1.0LC without settling more than is given in Table 1 (see also 5.6).

Table 1: Allowed settling of the textile webbing after cyclic loading test

Lashing capacity LC, kN		Allowed settling with $2^1/_4$ turns around the rotating axis, mm
Lifting	Load securing	
5 < LC ≤ 20	10< LC ≤ 40	15
20< LC ≤ 40	40< LC ≤ 80	20
40< LC	80< LC	25

4.3.2.3 Ratchet strength

The ratchet has to withstand a force as given in Table 2, applied on the handle without failure when tested in accordance with 5.5.4. The force is applied on the central 1/3 of the handle width or by a textile webbing equal to the one used.

Table 2: Minimum breaking force of ratchet at strength test using the ratchet handle

S/N	Internal width of ratchet, mm	Handle test force, N
1.	25	500
2.	35	1500
3.	50	2500
4.	75	3500
5.	100	4500

4.3.2.4 Winch cranks

On web lashings containing a winch, the crank or handle of which is demountable, the design of the winch shall be to ensure that an unintentional detachment or release of the crank or handle is prevented.

4.4 End fitting

End fittings shall not present any sharp corners, edges and burrs and shall be so designed that no crushing and shearing points arise.

4.5 Tension retaining device

Tension retaining devices shall fulfill the same requirements as given for end fittings in 4.4. They shall not allow any slippage of the webbing after closure is complete when tested in accordance with 5.6.

4.6 Performance characteristics of the textile webbing

4.6.1 Material

The textile webbing shall be produced wholly from high tenacity yarns fast to light and heat stabilized with a tenacity of not less than 60cN per tex from one of the following materials:

a) Polyamide (PA), high tenacity continuous multi filament;
b) Polyester (PES), high tenacity continuous multifilament;
c) Polypropylene (PP), high tenacity continuous multifilament.

NOTE 1: Attention is drawn to the different resistance of man-made fibres to chemicals as summarized in Annex A.9.

All seams shall be made from thread of the same material as that of the webbing and shall be made with a locking stitch.

NOTE 2: To facilitate inspection, the sewing thread may be of a different colour from that of the webbing.

4.6.2 Width

The following tolerances shall be permitted on nominal width when the webbing is tested in accordance with the requirements of TZS 44:

a) ±10 percent for widths less than or equal to 100m, and
b) ±8 percent for widths greater than 100mm.

NOTE: Preferred widths are 25, 35, 50, 75, 100, 150, 200 and 300mm.

4.6.3 Thickness

Webbing shall be of minimum thickness of 1.2mm. When the sling consists of several assembled webbings, these shall be identical.

NOTE: The surfaces of the webbing may be covered with suitable protection.

4.6.4 Working load limit (Capacity)

The working load limit for each sling in basic configuration (see Fig. 1) shall be verified by use of the strength test given in **5.3.**

Note 1: It is preferred that the working load limits for slings in basic configuration be chosen from following values either in kilograms or tonnes, taken from the R10 series of preferred numbers:

160, 200, 250, 315, 400, 500, 630, 800 kg

1, 1.25, 1.6, 2, 2.5, 3.1, 4.5, 6.3, 8, 10, t

Note 2: The working load limit in kilograms corresponds to the maximum force of utilization in decanewtons x 1.02.

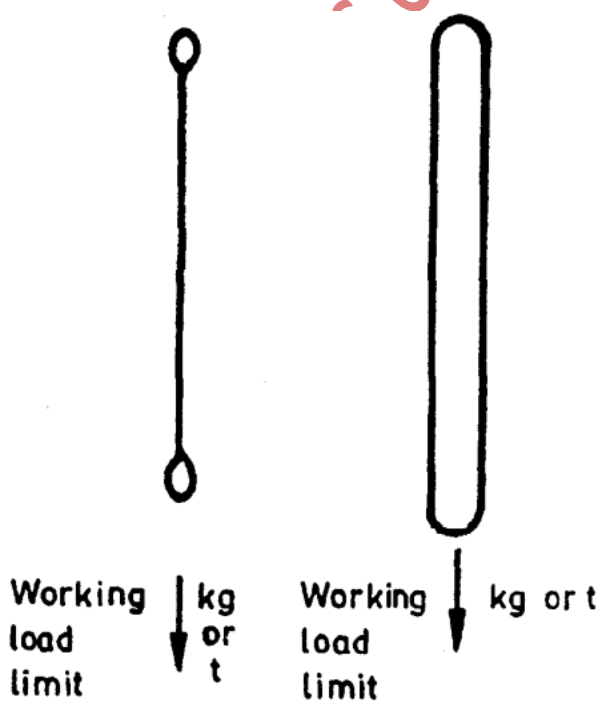

Figure 1- Basic configuration

4.6.5 Maximum safe working load

The maximum safe working load for a sling or sling assembly shall be the product of the working load limit of the sling in basic configuration and the mode factor as specified in annex B-1. The maximum safe working load for slings having preferred values for working load limit shall be.as specified in annex B-2.

Note: Maximum safe working load = Working load limit **(WLL)** × Mode factor **(M)**

4.6.6 Safety factor

The maximum value for the safety factor, as defined in 3.18, shall be 6 for the sewn webbing component of slings, and 4 for end fittings.

4.7 Tension force indicator (optional)

Where a tension force indicator is fitted, the indicated values shall be easily readable.

For mechanical systems the minimum movement of the indicators shall be (10 ± 1.5mm)/10kN within a temperature range of -10°C to + 40°C.

The same requirements as specified for tensioning devices shall apply by analogy to tension force indicators. If the tension force indicator fails the design shall ensure that the web lashing becomes not disconnected.

5. Verification of safety requirements and type tests

5.1 General

Type tests in accordance with 5.3 to 5.7 shall be carried out on at least two samples of each type.

Production tests in accordance with 5.3 and 5.4 shall be carried out on samples taken in accordance with 5.2.

5.2 Sampling for production tests

The sampling rates shall be as given in Table 3.

Table 3 - Sampling rate for tensile testing of complete web lashings

S/N	**Lashing capacity LC, kN**		Lot size **Minimum sampling rate,** 2 samples per every
	Lifting	Load securing	
1.	up to 5	up to 10	6000 pieces
2.	over 5 up to 10	over 10 up to 20	3000 pieces
3.	over 10 up to 30	over 20 up to 60	2000 pieces
4.	Over 30	over 60	1000 pieces

5.3 Tensile test of textile webbings

5.3.1 Principle

A representative sling is submitted to a force equal to at least the product of maximum force of utilization and the safety factor for sewn webbing component, that is, to a load at least equal to the product of the chosen working load limit and the safety factor.

5.3.2 Apparatus

A tensile testing machine of appropriate capacity with constant rate of traverse of straining head not exceeding 250mm per minute and with a maximum scale reading not greater than ten times the test force.

5.3.3 Selection of specimens

The first manufactured sling of same each material and working load limit shall be the first test specimen and further test specimens of the same type shall be selected at intervals of at least 250 slings manufactured. If the slings as manufactured are of a length unsuitable for testing on available equipment, a test specimens shall be made identical with the slings but of a length suitable for testing.

Note: In cases where slings are produced with end fittings having a strength less than the product of the maximum force of utilization and the appropriate safety factor for the sewn webbing component, the specimen should be selected from 250 slings of the same type made at the same time as the production lot but without the end fittings.

5.3.4 Test procedure

Place the specimen straight and without twist in the test machine and submit it to a test force as described in **5.3.1**. For an endless sling, apply the force to both parts. Apply the force so that the extension of the sling takes place at a constant rate of between 6 percent and 10 percent of the initial length of the sling per minute, but not exceeding 250mm/min. Where possible apply the force at such a rate that the test force is reached in 60 ± 10s.

5.3.4.1 Test slings with soft eyes on the machine by using bars of such diameter that the resulting angle between the parts of the eye does not exceed 20. Test endless slings on the machine using bars of diameter not exceeding 100 mm or 10 percent of the eventual length of the sling, whichever is the lesser. Ensure that the whole of the stitching is free of the bars during the test.

5.3.5 Results

If the test force specified in **5.3.4** or **5.3.4.1** is reached without breakage, the specimen shall be satisfactory.

5.4 Testing of the complete web lashing

The samples taken shall be submitted to a visual inspection, ensuring that no sharp edges and burrs come into contact with the webbings or the operator's hands and that no hand injuries by crushing and shearing may occur.

Assemble the complete web lashing with its end fittings using ordinary means of attachment for mounting in a tensile testing machine. If the tensioning element in the web lashing is a ratchet the slotted axis shall be in proper position.

Load the web lashing to 1.25LC, maintained for one minute. The test shall be carried out with $2^1/_4$ turns around the rotating axis.

All load bearing parts of the complete web lashing shall show no evidence of deformation or any other defect that affect the function.

After release of this force:

a) Inspect the component for permanent distortion;
b) No malfunction shall occur, as described in 4.1 a, b and c

NOTE: Elongation of the material of the webbing and circumferential bedding in of the tensioning device should not be confused with slippage of the webbing in the tensioning device.

After this inspection the complete web lashing shall withstand at least 2LC without failure (with $2^1/_4$ turns around the rotating axis).

NOTE: The breaking force may then be determined.

Other end fittings or means of attachment shall be tested. This may be done with the webbing only (without ratchet) so that all combinations may then be considered tested.

5.5 Type testing for ratchets and other tensioning devices with rotating axis

5.5.1 Test of pre-tension ability

The complete web lashing shall be attached to two fixed points 0.5m to 4m apart, or a corresponding vertical or horizontal testing machine shall be utilized. Usually the upper clamping device is connected with the force measuring device**.**

When a web lashing with ratchet is to be tested, the slotted axis into which the webbing has been inserted shall be turned $1^1/_4$ turns at the beginning of the test including the long loose end (see Figure 1b). The textile webbing shall be positioned such that after $1^1/_4$ turns tension is built up in the web lashing. The maximum value is 0.05LC (see Figure 2).

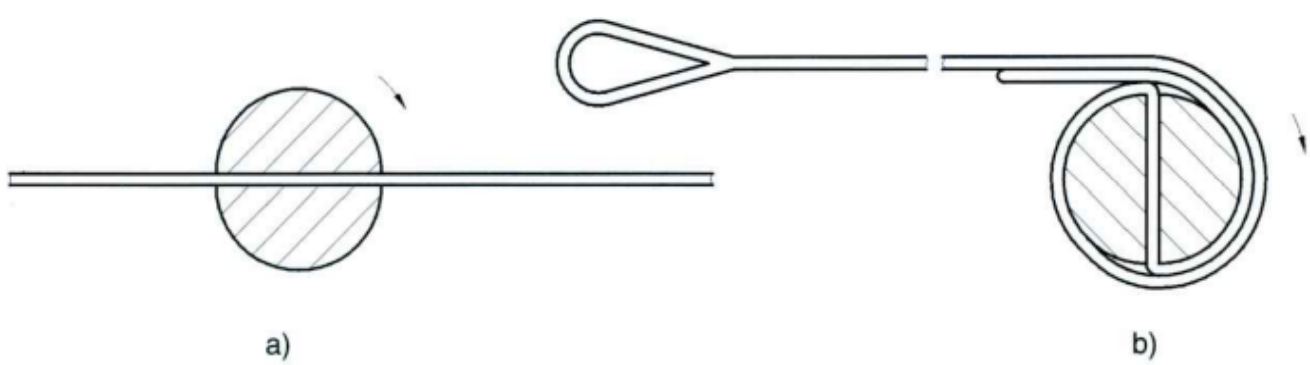

Figure 2 - Testing procedure

The handle shall then be moved so that, when applying the standard hand force, it is situated at right angles (± 5°) to the axis of the textile webbing (see Figure 3). The handle shall then be

released in order to activate the locking device. Measure the force that the tensioning device retains in the web lashing 10 seconds after the handle has been released. Repeat this procedure 4 times (in case of uneven number of teeth 2 x 3 times, 180' different starting position) after re-positioning the textile webbing in the slot and calculate the mean value of 4 (in case of uneven number of teeth delete the maximum and minimum value), it shall have a max. value of 0.5LC and for ratchets and other tensioning devices with rotating axis designed for frictional lashing a min. value of 0.1LC or more in steps of 0.02LC (e g. 0.12LC; 0.14LC; 0.16LC; 0.18LC; 0.20LC ...).

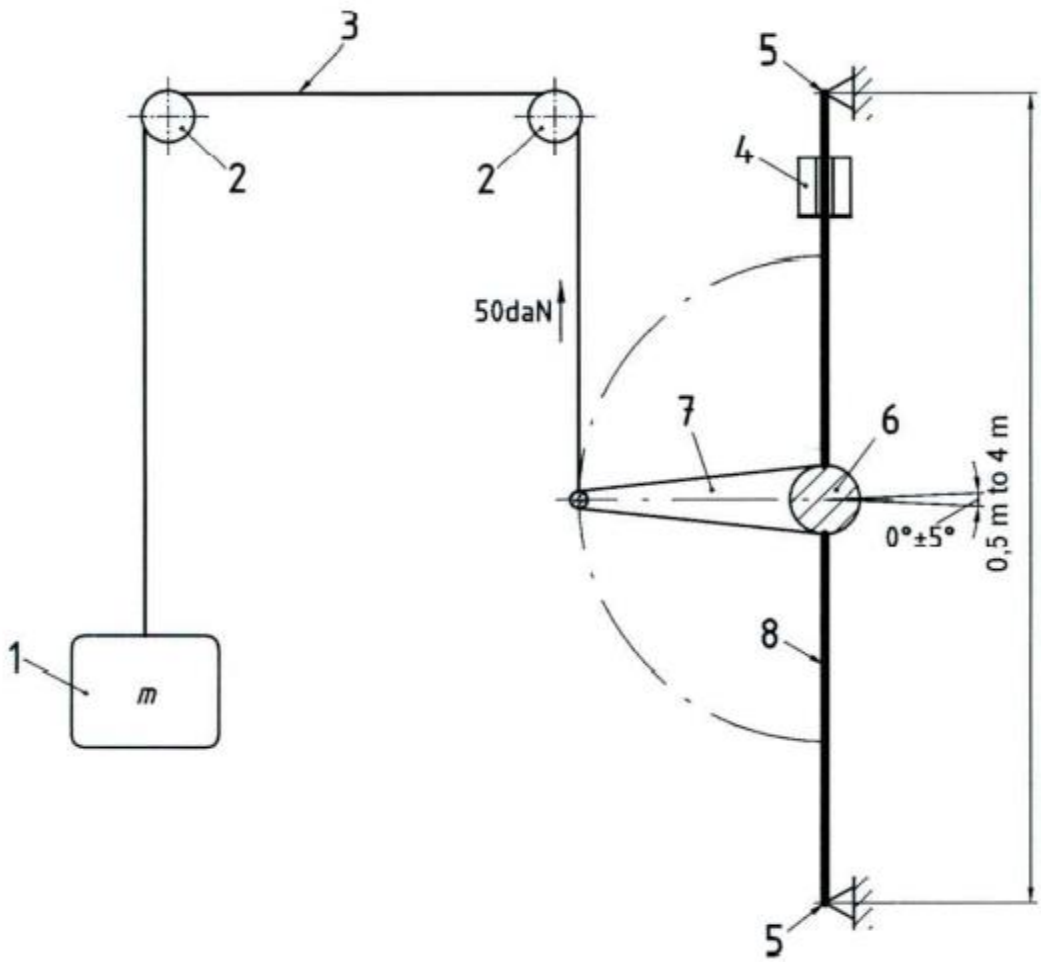

Key

1 – Load
2 – Idler pulleys
3 – Rope
4 – Force transducer
5 – Fixing point
6 – Slotted axis
7 – Handle
8 – Textile webbing

Figure 3 - Schematic arrangement for testing the pre-tensioning ability of ratchets

5.5.2 Test of the ability to release under tension

The ability to release under tension shall be tested by loading the web lashing to 0.3LC, and releasing the tension in the web lashing by hand without the use of tools.

After release of the load, the following characteristics of the tensioning device shall be noted:

a) ability to release by hand without tools;
b) appraisal of any hazard to the operator at release.

5.5.3 Cyclic loading test

5.5.3.1 For ratchets and winches

The textile webbing shall be wound $2^1/_4$ times around the split pin at the start of the test. The length of the free textile webbing shall be (0.5- 1.0)m (see Figure 4).

Load the web lashing in straight pull with a force equivalent to LC.

Reduce the load to 0.2LC.

Draw a line, e. g. with a marker pen, on the textile webbing at the tensioning device.

Subject the web lashing to 100 cycles at a frequency not exceeding 0.4Hz between 0.2LC and 1.0LC.

Measure the circumferential settling of the textile webbing at 0.2LC; the values of Table 1 shall not be exceeded.

NOTE 1: The sample used for the cyclic loading test may be used for the determination of the breaking force.

NOTE 2: Two possible fixings in the test machine for the cyclic loading test procedure are shown in figure 3.

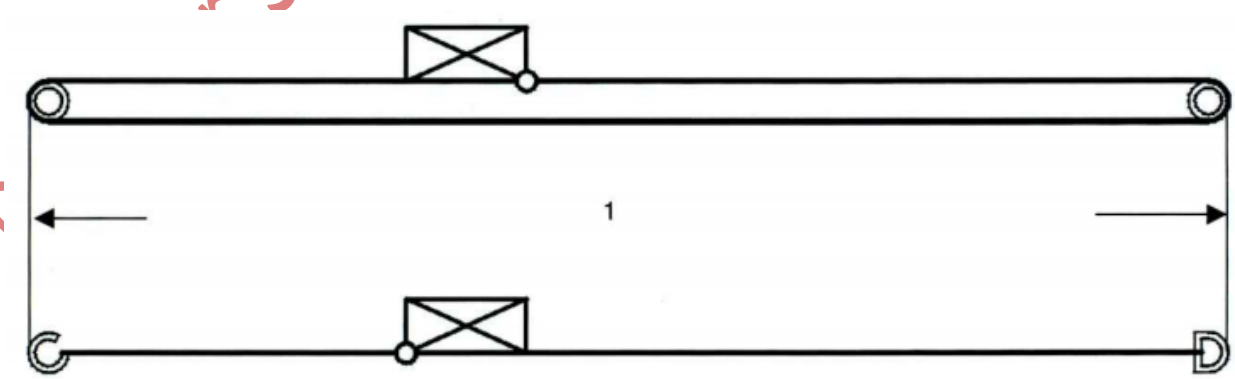

Key
1 - Length of the free textile webbing

Figure 4 - Fixings for cyclic loading test

5.5.3.2 For other tensioning devices and tension retaining devices

Insert the web lashing into the device (if appropriate, as shown in Figure 2).

Secure the device, and load to 1LC

Reduce the load to 0.2LC.

Draw a line, e. g. with a marker pen, on the web lashing at the device.

Subject the web lashing to 100 cycles between 0.2LC and 1.0LC at a frequency not exceeding 0.4Hz.

On completion of the test, the position of the line relative to its initial position shall be checked at 0.2LC. The movement of the line shall not exceed the limits stated in Table 1.

5.5.4 Strength test using the ratchet handle

Mount the sample handle into a fixture such that the slotted axis is prevented from turning (see Figure 5). Apply a force acting at 90° to the handle. Increase the force until failure occurs. Note the breaking force and the location of the rupture.

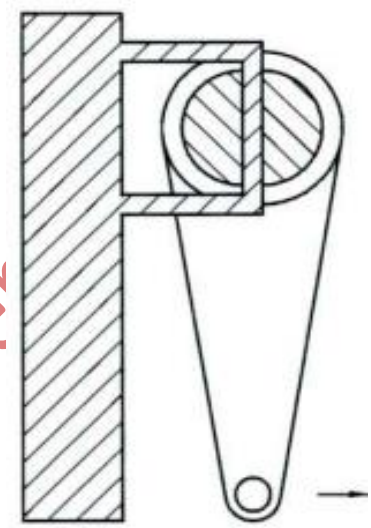

Figure 5 - Positioning for strength test of the handle

5.5.5 Testing of winch cranks

On web lashings containing a winch, the crank or handle of which is demountable, the design of the winch shall be investigated visually and a function test shall be made by hand to make sure that inadvertent detachment or release of the crank or handle is prevented.

5.6 Type testing for other tensioning devices and tension retaining devices

The type tests tor these devices shall consist of:

a) the cyclic loading test (5.5.3.2);
b) the test of the ability to release under tension (5.5.2);
c) the test of recoil (5.7).

5.7 Test of recoil

When moving the lever of tensioning devices during the test in accordance with 5.5.2, the recoil at the end of the handle buckle or lever shall be measured (max. 150mm).

5.8 Re-test and acceptance criteria

When type testing, if either of the two samples fails to meet the requirements of one or more of the tests in 5.3 or 5.7, two more similar samples shall be tested.

When production testing, if one sample fails to meet the requirements of one or more of the tests in 5.2 or 5.4, two more samples shall be taken from the same production series or batch and shall be tested.

If any sample for re-testing, for either type or production testing fails to meet the requirements of any of the above tests, the web lashing shall be considered as not meeting the requirements of this Draft Tanzania Standard.

6. Test report

The following points shall be reported to be part of the technical file of the manufacturer:

a) If the web lashing fails during the test (5.3 and 5.4);
b) Any damage to the webbing surface;
c) Any sign of permanent distortion, cracks, flaws or any other defects on the fittings or tensioning device (5.4);
d) Maximum tensile force applied (5.4);
e) That at 2LC no failure occurred (5.4);
f) Mean value of the pre-tension force and obtained level (5.5.1);
g) Results of the cyclic loading test (5.5.3/5.6);
h) Results of the handle strength test (5.5.4);
i) Results of the re-test (5.8).

7. Marking

a) Lashing capacity LC;
b) Length in meter;
c) Norminal width and thickness;
d) Standard hand force S_{HF};
e) Material of the textile webbing;
f) Warning “not for lifting”;
g) Manufacturer or supplier’s name or symbol;
h) Date of manufacture;
i) Elongation of textile webbing in % at LC.

End fittings, tensioning devices, tension retaining devices and tension indicators of LC≥5kN shall be marked with the manufacturers or supplier's name or symbol.

The value of LC shall be marked on parts with LC≥5kN in kN, on parts with LC<5kN in daN.

Labels shall have the following colours;

a) Blue for PES webbing;
b) Green for PA webbing and

c) Brown for PP webbing.

8. Instructions for use.

Instructions for use shall accompany each web lashing or web lashing equipment in accordance with **Annex A.**

Annex A
(Normative)

A.1 In selecting and using web lashings, consideration shall be given to the required lashing capacity, taking into account the mode of use and the nature of the load to be secured. The size, shape and weight of the load, together with the intended method of use, transport environment and the nature of the load will affect the correct selection. For stability reasons free-standing units of load have to be secured with a minimum of one pair of web lashings for frictional lashing and two pairs of web lashing for diagonal lashing.

A.2 The selected web lashings shall both be strong enough and of the correct length for the mode of use. Basic lashing rules:

a) Plan the fitting and removal operations of lashing before starting a journey;
b) Keep in mind that during journeys parts of the load may have to be unloaded;
c) Only those web lashings designed for frictional lashing with S_{TF} on the label are to be used for frictional lashing.
d) Check the tension force periodically, especially shortly after starting the journey.

A.3 Because of different behaviour and elongation under load conditions, different lashing equipment (e. g. lashing chain and web lashings) shall not be used to lash the same load. Consideration shall also be given to ancillary fittings (components) and lashing devices in the load restraint assembly are compatible with the web lashing.

A.4 During use flat hooks (see D2 in Figure 1) shall engage over the complete width of the bearing surface of the hook**.**

A.5 Release of the web lashing: Care should be taken to ensure that the stability of the load is independent of the lashing equipment and that the release of the web lashing shall not cause the load to fall off the vehicle, thus endangering the personnel. If necessary attach lifting equipment for further transport to the load before releasing the tensioning device in order to prevent accidental falling and/or tilting of the load. This applies as well when using tensioning devices which allow controlled removal.

A.6 Before attempting to unload a unit of load its web lashings shall be released so that it can be lifted freely from the load platform.

A.7 During loading and unloading attention has to be paid to proximity of any low overhead power lines.

A.8 The materials from which web lashings are manufactured have a selective resistance to chemical attack.
Seek the advice of the manufacturer or supplier if exposure to chemicals is anticipated. It should be noted that the effects of chemicals may increase with rising temperature. The resistance of man-made fibres to chemicals is summarized below;
-Polyamides are virtually immune to the effects of alkalis. However, they are attacked by mineral acids
-Polyester is resistant to mineral acids but is attacked by alkalis.
-Polypropylene is little affected by acids and alkalis and is suitable for applications where high resistance to chemicals (other than certain organic solvents) is required.
Solutions of acids or alkalis which are harmless may become sufficiently concentrated by evaporation to cause damage. Take contaminated webbings out of service at once, thoroughly soak them in cold water and dry naturally.

A.9 Web lashings complying with this Draft Tanzania Standard are suitable for use in the following temperature ranges:

a) - 40 °C to +80 °C for polypropylene (PP);
b) - 40 °C to +100 °C for polyamides (PA);
c) - 40 °C to +120 °C for Polyester (PES);

These ranges may vary in a chemical environment. In that case the advice of the manufacturer or supplier shall be sought.
Changing the environmental temperature during transport may affect the forces in the web lashing. Check the tension force after entering warm areas

A.10 Web lashings shall be rejected or returned to the manufacturer for repair if they show any signs of damage.

The following criteria are considered to be signs of damage:

-Only web lashings bearing identification labels shall be repaired;

-If there is any accidental contact with chemical products, a web lashing shall be removed from service and the manufacturer or supplier shall be consulted;

-For web lashings (to be rejected): tears, cuts, nicks and breaks in load bearing fibres and retaining stitches; deformations resulting from exposure to heat;

-For end fittings and tensioning devices: deformations, splits, pronounced signs of wear, signs of corrosion.

A.11 Care should be taken that the web lashing is not damaged by the sharp edges of the load on which it is used.

A visual inspection before and after each use is recommended.

A.12 Only legibly marked and labeled web lashings shall be used.

A.13 Web lashings shall not be overloaded: Only the maximum hand force of 500 N (50 daN on the label: 1 daN = 1 kg) shall be applied. Mechanical aids such as levers, bars etc. as extensions are not to be used unless they are part of the tensioning device.

A.14 Web lashings shall never be used when knotted.

A.15 Damage to labels shall be prevented by keeping them away from sharp edges of the load and. if possible, from the load.

A.16 The webbing shall be protected against friction, abrasion and damage from loads with sharp edges by using protective sleeves and/or corner protectors.

Annex B

(Clauses 3.20, 3.21 and 4.6.5)

MODES OF ASSEMBLY, MODE FACTORS AND MAXIMUM SAFE WORKING LOADS FOR SINGLE AND ENDLESS SLINGS

B-1 MODES OF ASSEMBLY AND MODE FACTORS

For single and endless slings shall be as shown in figure 6 below:

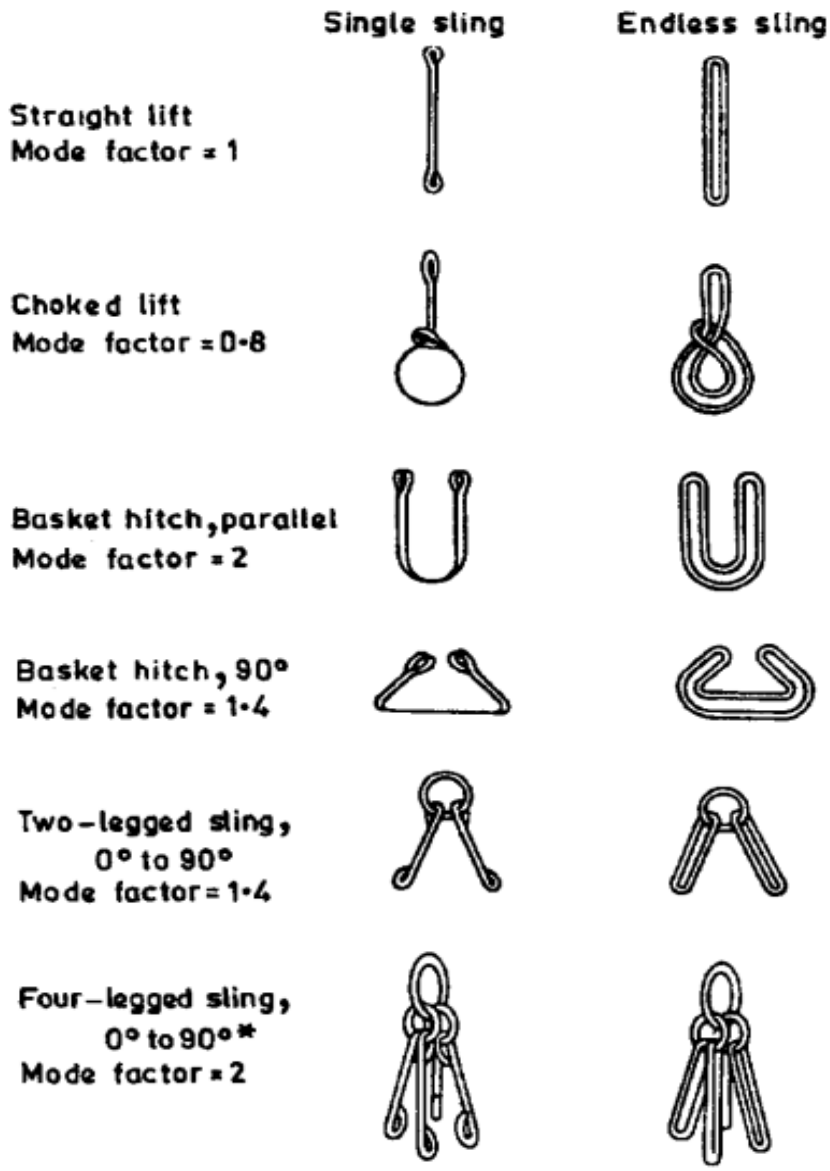

Figure 6 – modes of assembly for single and endless slings

B-2 MAXIMUM SAFE WORKING LOAD

The maximum safe working loads for slings having the preferred values for working load limit (see 4.6.4) shall be as given in Table 4.

Table 4: Maximum Safe Working Loads for preferred Working Load Limits

Working Load Limit for each sling in basic configuration, kg	**Corresponding minimum strength of the sewn webbing component,** daN	**Maximum safe working loads**					
		Straight lift, M[1)]=1 kg	**Chocked lift,** M=0.8 kg	**Basket hitch**		**2-legged sling,** 0 to 90° M=1.4 kg	**4-legged sling,** 0 to 90° M=2 kg
				Parallel, M=2 kg	90°, M=1.4 kg		
160	940	160	130	320	220	220	320
200	1180	200	160	400	280	280	400
250	1470	250	200	500	350	350	500
315	1850	315	250	630	440	440	630
400	2350	400	320	800	560	560	800
500	2940	500	400	t[2)] 1.0	700	700	t 1.0
630	3700	630	500	1.25	880	880	1.25
800	4700	800	640	1.6	t 1.1	t 1.1	1.6
t 1.0	5880	t 1.0	800	2.0	1.4	1.4	2.0
1.25	7350	1.25	t 1.0	2.5	1.8	1.8	2.5
1.6	9410	1.6	1.3	3.2	2.2	2.2	3.2
2.0	11760	2.0	1.6	4.0	2.8	2.8	4.0
2.5	14700	2.5	2.0	5.0	3.5	3.5	5.0
3.1	18500	3.1	2.5	6.3	4.4	4.4	6.3
4.0	23500	4.0	3.2	8.0	5.6	5.6	8.0
5.0	29400	5.0	4.0	10.0	7.0	7.0	10.0
6.3	37000	6.3	5.0	12.6	8.8	8.8	12.6
8.0	47000	8.0	6.4	16.0	11.2	11.2	16.0
10.0	58000	10.0	8.0	20.0	14.0	14.0	20.0

[1)]M = Mode factor [2)]t = tonne