KENYA STANDARD

KS 2948-2:2022

ICS ##.###

First Edition

Safe play environment for children — Guidelines

Part 2:

Playground hazards

Kenya Bureau of Standards

Standards for Quality life

PUBLIC REVIEW DRAFT NOVEMBER 2022

TECHNICAL COMMITTEE REPRESENTATION

The following organizations were represented on the Technical Committee:

The following organizations were represented on the Technical Committee:

AMC Group Africa Limited (formerly, Apex Management Systems - Consultants Ltd)

Assist Development Solutions (ADS)

Competition Authority of Kenya

Consumer Information Network

Ideaz Software

Kenyatta University

Topserve East Africa Limited

Nairobi Sports House Limited

Nile Road special school

Mount Kenya University

Kenya Bureau of Standards — Secretariat

REVISION OF KENYA STANDARDS

In order to keep abreast of progress in industry, Kenya Standards shall be regularly reviewed. Suggestions for improvements to published standards, addressed to the Managing Director, Kenya Bureau of Standards, are welcome.

KENYA STANDARD

KS 2948-2:2022

ICS ##.###

First Edition

Safe play environment for children — Guidelines

Part 2:

Playground hazards

Kenya Bureau of Standards, Popo Road, Off Mombasa Road,
P.O. Box 54974 - 00200, Nairobi, Kenya

+254 020 6948000, + 254 722202237, + 254 734600471

info@kebs.org

@KEBS_ke

kenya bureau of standards (kebs)

KS 2948-2: 2022

Foreword

This Kenya Standard was prepared by the Safety of toys Technical Committee under the guidance of the Standards Projects Committee, and it is in accordance with the procedures of the Kenya Bureau of Standards

This is the First edition of this standard.

The guidelines in this standard are focused on playground-related injuries and mechanical mechanisms of injury; falls from playground equipment have remained the largest single hazard pattern associated with playground use

These guidelines do not represent the sole method to minimize injuries associated with playground equipment. However, the recommendations will contribute to greater playground safety.

This is Part 2 of KS 2948 which consists of the following parts, under the general title *Safe play environment for children — Guidelines*

— *Part 1: General playground considerations*

— *Part 2: Playground hazards*

— *Part 3: Maintaining a playground*

— *Part 4: Parts of the playground*

During the preparation of this standard, reference was made to the following document (s):

1. Royal Society for the Prevention of Accidents – Accidents do not have to happen

2. EN1176 Playground equipment standard

3. US Consumer Product Safety Commission – Public playground safety hand book

Acknowledgement is hereby made for the assistance derived from this (these) sources

Introduction

In recent years, it is estimated that there were more than 200,000 injuries annually on public playgrounds across the country that required emergency room treatment. By following the recommended guidelines in this standard, safer playground environment for all children can be created and reduction of playground-related deaths and injuries ensured.

The safety of each individual piece of playground equipment as well as the layout of the entire play area should be considered when designing or evaluating a playground for safety. Since falls are a very common playground hazard pattern, the installation and maintenance of protective surfacing under and around all equipment is crucial to protect children from severe head injuries. Because all playgrounds present some challenge and because children can be expected to use equipment in unintended and unanticipated ways, adult supervision is highly recommended. This draft standard provides some guidance on supervisory practices that adults should follow. Appropriate equipment design, layout, and maintenance, as discussed in this draft standard, are also essential for increasing public playground safety.

A playground should allow children to develop gradually and test their skills by providing a series of graduated challenges. The challenges presented should be appropriate for age-related abilities and should be ones that children can perceive and choose to undertake. Toddlers, preschool- and school-age children differ dramatically, not only in physical size and ability, but also in their intellectual and social skills.

Therefore, age-appropriate playground designs should accommodate these differences with regard to the type, scale, and the layout of equipment. Recommendations throughout this draft standard address the different needs of toddlers, preschool-age, and school-age children; “toddlers “refers to children ages 6 months through 2 years of age, “preschool-age” refers to children 2 through 5 years, and “school-age” refers to children 5 through 12 years. The overlap between these groups is anticipated in terms of playground equipment use and provides for a margin of safety.

Safe play environment for children — Guidelines

Part 2:

Playground hazards

1 Scope

This draft standard presents safety information for public playground equipment in the form of guidelines. This is Part 2 of KS 2948. It provides a broad overview of general hazards that should be avoided on playgrounds. It is intended to raise awareness of the risks posed by each of these hazards.

2 Application

This draft standard is intended for use by childcare personnel, school officials, parks and recreation personnel, equipment purchasers and installers, playground designers, and another members of the general public (e.g., parents and school groups) concerned with public playground safety and interested in evaluating their respective playgrounds. Due to the wide range of possible users, some information provided maybe more appropriate for certain users than others.

Public" playground equipment refers to equipment for used by children ages 6 months through 12 years in the playground areas of:

- Commercial (non-residential) child care facilities
- Institutions
- Multiple family dwellings, such as apartment and condominium buildings
- Parks, such as city, state, and community maintained parks
- Restaurants
- Resorts and recreational developments
- Schools
- Other areas of public use

These guidelines are not intended for amusement park equipment, sports or fitness equipment normally intended for users over the age of 12 years, soft contained play equipment, constant air inflatable play devices for home use, art and museum sculptures (not otherwise designed, intended and installed as playground equipment), equipment found in water play facilities, or home playground equipment.

Equipment components intended solely for children with disabilities and modified to accommodate such users also are not covered by these guidelines.

2 Normative references

The following document is referred to in the text in such a way that some or all of its content constitutes requirements of this document. For dated references, only the edition cited applies. For undated references, the latest edition of the referenced document (including any amendments) applies.

KS 2948-1 *Safe play environment for children — Guidelines Part 1: General playground considerations*

3 Terms and definitions

For the purposes of this document, the terms and definitions in KS 2948 Part 1 shall apply.

4 Playground hazards

4.1 Crush and Shearing Points

4.1.1 Anything that could crush or shear limbs should not be accessible to children on a playground. Crush and shear points can be caused by parts moving relative to each other or to a fixed part during a normal use cycle, such as a seesaw.

4.1.2 To determine if there is a possible crush or shear point, consider:

a) the likelihood a child could get a body part inside the point, and

b) the closing force around the point.

4.2 Entanglement and Impalement

Projections on playground equipment should not be able to entangle children's clothing nor should they be large enough to impale. To avoid this risk:

a) The diameter of a projection should not increase in the direction away from the surrounding surface toward the exposed end (see Figure 1).

b) Bolts should not expose more than two threads beyond the end of the nut (see Figure 3).

c) All hooks, such as S-hooks and C-hooks, should be closed. A hook is considered closed if there is no gap or space greater than 0.04 inches, about the thickness of a dime.

NOTE Any connecting device containing an in-fill that completely fills the interior space preventing entry of clothing items into the interior of the device is exempt from this requirement

4.2.1 Strings and ropes

Drawstrings on the hoods of jackets, sweatshirts, and other upper body clothing can become entangled in playground equipment and can cause death by strangulation. To avoid this risk:

a) Children should not wear jewelry, jackets or sweatshirts with drawstring hoods, mittens connected by strings through the arms, or other upper body clothing with drawstrings.

b) Remove any ropes, dog leashes, or similar objects that have been attached to playground equipment. Children can become entangled in them and strangle to death.

c) Avoid equipment with ropes that are not secured at both ends.

d) The following label, or a similar sign or label, can be placed on or near slides or other equipment where potential entanglements may occur.

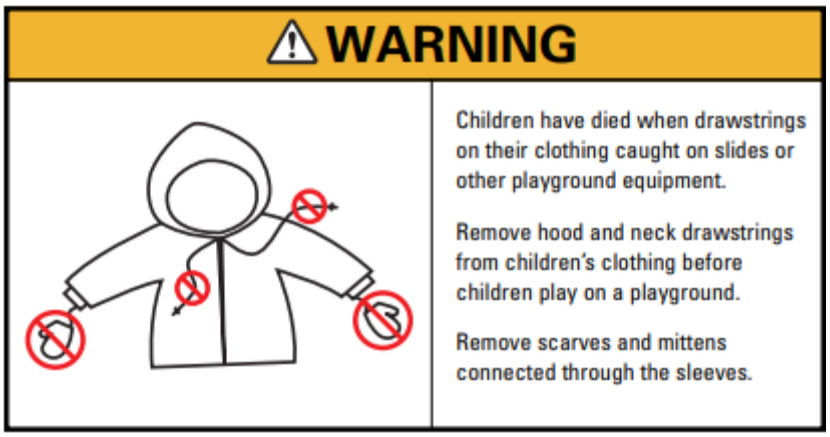

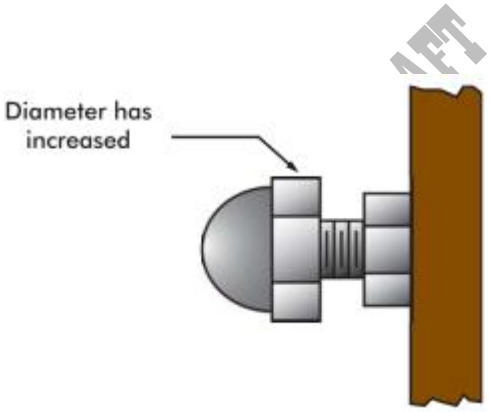

Figure 1 — Example of a hazardous projection that increases in diameter from plane of initial surface and forms an entanglement hazard and may also be an impalement hazard

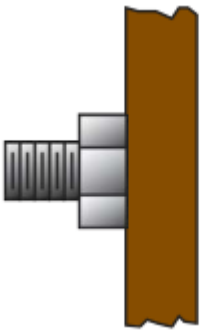

Figure 2 — Example of a hazardous projection that extends more than 2 threads beyond the nut and forms an impalement/laceration hazard and may also be an entanglement hazard

4.3 Entrapment

4.3.1 Head entrapment

— Head entrapment is a serious concern on playgrounds since it could lead to strangulation and death. A child's head may become entrapped if the child enters an opening either feet first or headfirst.

— Head entrapment by head-first entry generally occurs when children place their heads through an opening in one orientation, turn their heads to a different orientation, then are unable to get themselves out.

— Head entrapment by feet first entry involves children who generally sit or lie down and slide their feet into an opening that is large enough to permit their bodies to go through but is not large enough to permit their heads to go through.

— A part or a group of parts should not form openings that could trap a child's head. Also, children should not wear their bicycle helmets while on playground equipment. There have been recent head entrapment incidents in which children wearing their bicycle helmets became entrapped in spaces that would not normally be considered a head entrapment.

— Certain openings could present an entrapment hazard if the distance between any interior opposing surfaces is greater than 3.5 inches and less than 9 inches. These spaces should be tested as recommended in Annex A.

— When one dimension of an opening is within this range, all dimensions of the opening should be considered together to evaluate the possibility of entrapment.

— Even openings that are low enough for children's feet to touch the ground can present a risk of strangulation for an entrapped child. (See Figure 3).

— Younger children may not have the necessary intellectual ability or motor skills to reverse the process that caused their heads to become trapped, especially if they become scared or panicked

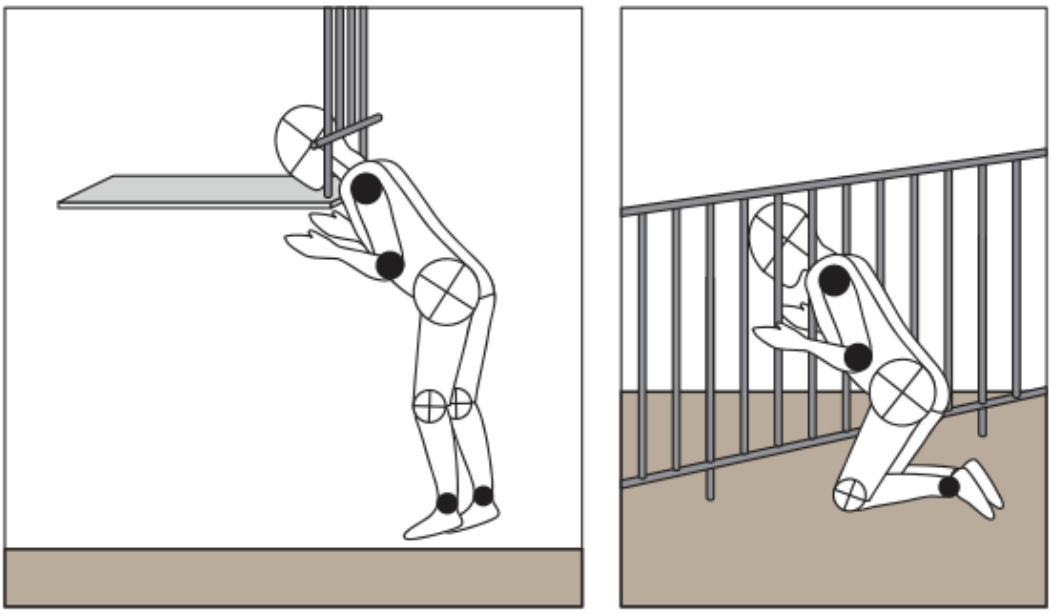

Figure 3 — Examples of entrapment below a barrier and between the vertical bars of a barrier

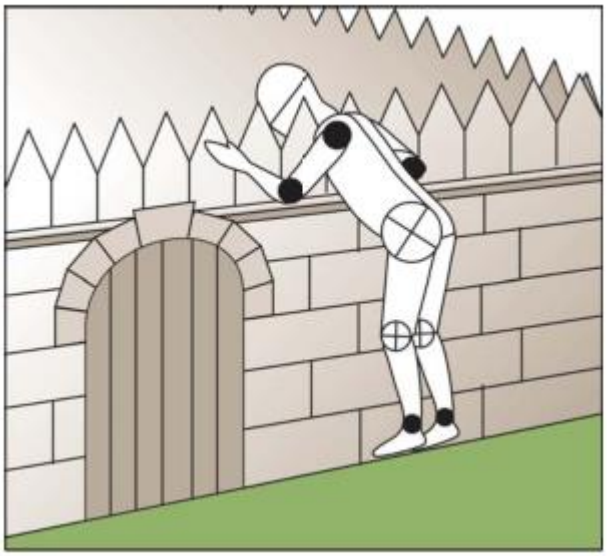

Figure 4 — Example of entrapment in an angle less than 55 degrees on a fort

4.3.2 Partially bound openings and angles

Children can become entrapped by partially bound openings, such as those formed by two or more playground parts.

4.3.2.1 Angles formed by two accessible adjacent parts should be greater than 55 degrees unless the lowest leg is horizontal or below horizontal.

4.3.2.2 Use the partially bound opening test in Annex A to identify hazardous angles and other partially-bound openings.

4.4 Sharp points, corners, and edges

Sharp points, corners, or edges on any part of the playground or playground equipment may cut or puncture a child's skin.

Sharp edges can cause serious lacerations if protective measures are not taken. To avoid the risk of injury from sharp points, corners and edges:

a) Exposed open ends of all tubing not resting on the ground or otherwise covered should be covered by caps or plugs that cannot be removed without the use of tools.

b) Wood parts should be smooth and free from splinters.

c) All corners, metal and wood, should be rounded.

d) All metal edges should be rolled or have rounded capping

e) There should be no sharp edges on slides.

f) Pay special attention to metal edges of slides along the sides and at the exit.

g) If steel-belted radials are used as playground equipment, they should be closely examined regularly to ensure that there are no exposed steel belts/wires.

h) Conduct frequent inspections to help prevent injuries caused by splintered wood, sharp points, corners, or edges that may develop as a result of wear and tear on the equipment

4.5 Suspended hazards

Children using a playground may be injured if they run into or trip over suspended components (such as cables, wires, ropes, or other flexible parts) connected from one piece of the playground equipment to another or hanging to the ground.

These suspended components can become hazards when they are within 45 degrees of horizontal and are less than 7 feet above the protective surfacing. To avoid a suspended hazard, suspended components:

a) Should be located away from high traffic areas.

b) Should either be brightly colored or contrast with the surrounding equipment and surfacing.

c) Should not be able to be looped back on themselves or other ropes, cables, or chains to create a circle with a 5 inch or greater perimeter.

d) Should be fastened at both ends unless they are 7 inches or less long or attached to a swing seat.

These recommendations do not apply to swings, climbing nets, or if the suspended component is more than 7 feet above the protective surfacing and is a minimum of one inch at its widest cross-section dimension.

3.6 Tripping Hazards

Play areas should be free of tripping hazards (i.e., sudden change in elevations) to children who are using a playground.

Two common causes of tripping are anchoring devices for playground equipment and containment walls for loose-fill surfacing materials.

3.6.1 All anchoring devices for playground equipment, such as concrete footings or horizontal bars at the bottom of flexible climbers, should be installed below ground level and beneath the base of the protective surfacing material.

3.6.2 This will also prevent children from sustaining additional injuries from impact if they fall on exposed footings.

a) Contrasting the colour of the surfacing with the equipment colour can contribute to better visibility.

b) Surfacing containment walls should be highly visible.

c) Any change of elevation should be obvious.

d) Contrasting the colour of the containment barrier with the surfacing colour can contribute to better visibility.

3.7 Used tires

Used automobile and truck tires are often recycled as playground equipment, such as tire swings or flexible climbers, or as a safety product such as cushioning under a seesaw or shredded as protective surfacing.

When recycling tires for playground use:

a) Steel-belted radials should be closely examined regularly to ensure that there are no exposed steel belts/wires.

b) Care should be taken so that the tire does not collect water and debris; for example, providing drainage

c) holes on the underside of the tire would reduce water collection.

d) Recycled tire rubber mulch products should be inspected before installation to ensure that all metal has been removed.

In some situations, plastic materials can be used as an alternative to simulate actual automobile tires

Annex A
(Informative)

Suggested general maintenance checklists

☐ There are no sharp points, corners or edges on the equipment (3.4). ☐ There are no missing or damaged protective caps or plugs (3.4). ☐ There are no hazardous protrusions (3.2). ☐ There are no potential clothing entanglement hazards, such as open S-hooks or protruding bolts (3.2).	☐ There are no crush and shearing points on exposed moving parts (3.1). ☐ There are no trip hazards, such as exposed footings or anchoring devices and rocks, roots, or any other obstacles in a use zone (3.6).

NOTES:

DATE OF INSPECTION: …….. INSPECTION BY: ……..

Annex B
(Normative)

Playground testing

B.1 Templates, Gauges, and Testing Tools

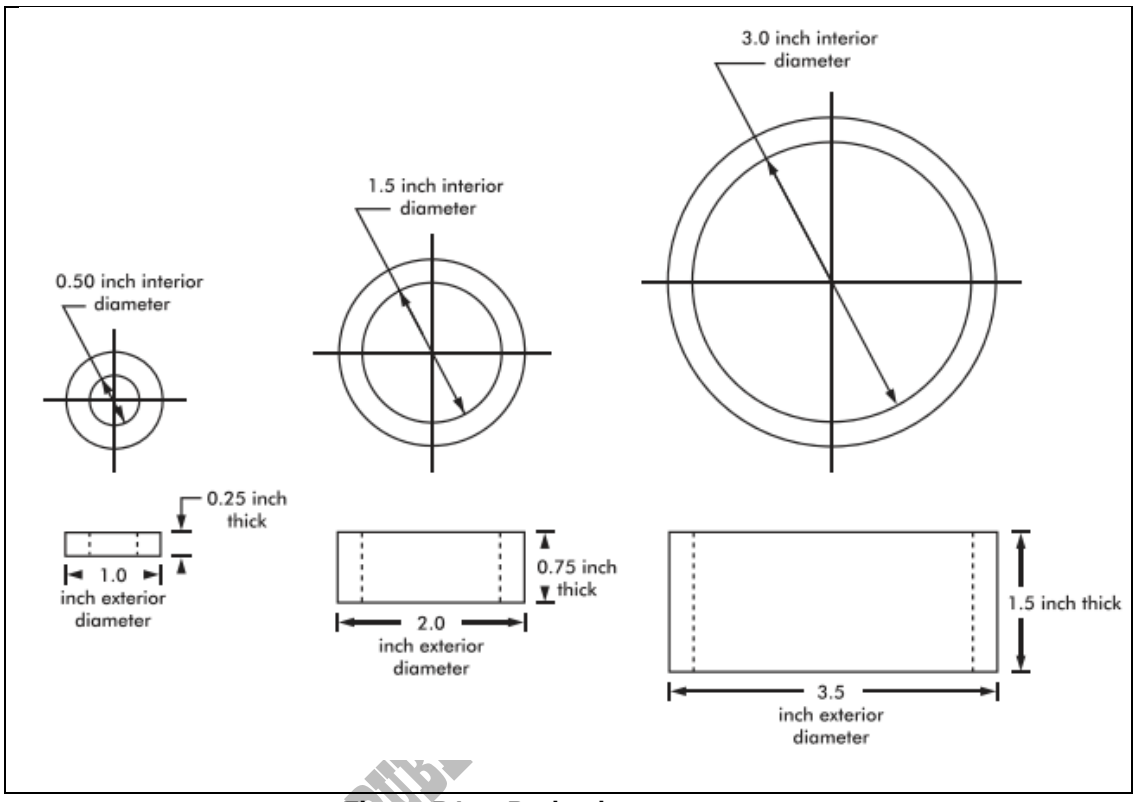

Figure B1 — Projection test gauges

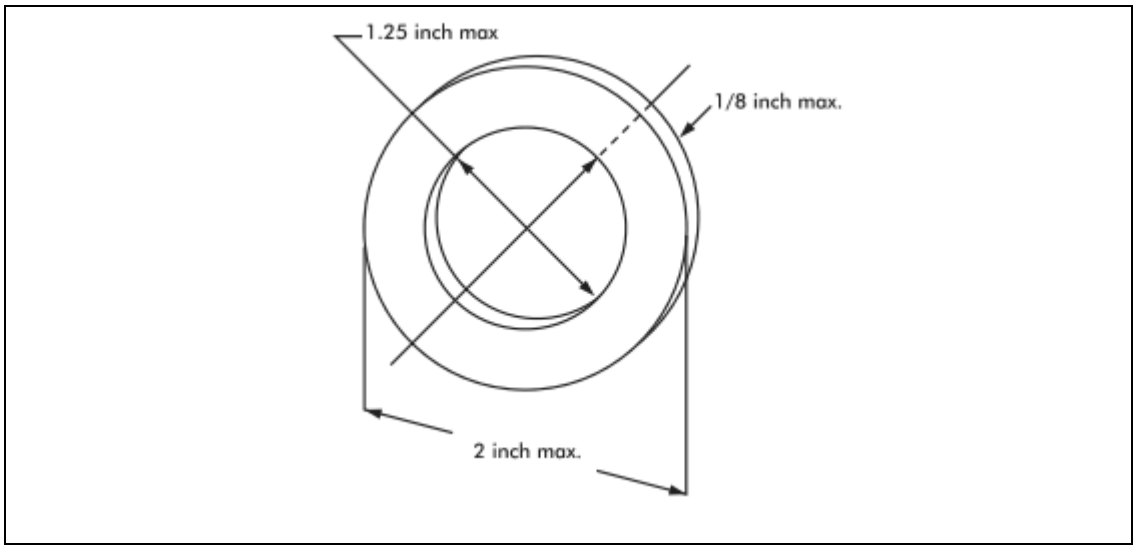

Note: gauge made of any rigid material

Figure B2 — Projection test gauge for suspended swing assemblies and slides

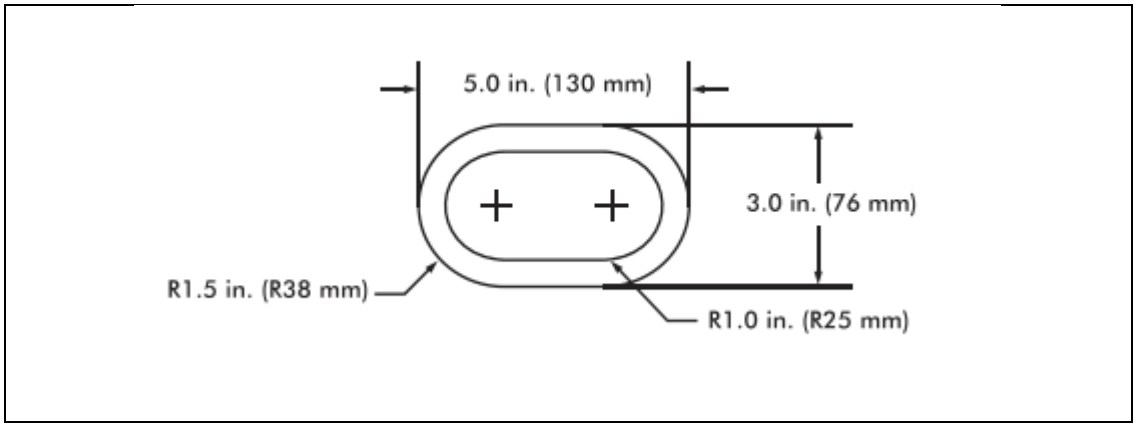

Figure B3 — Toddler small torso template

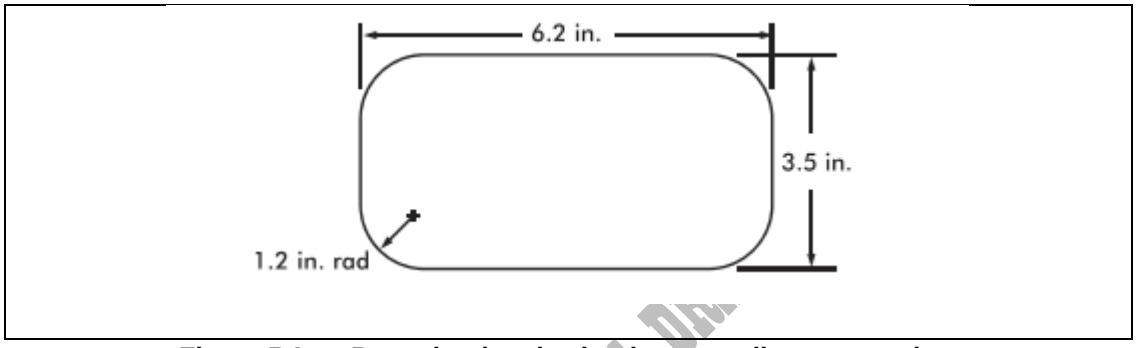

Figure B4 — Pre-school and school-age small torso template

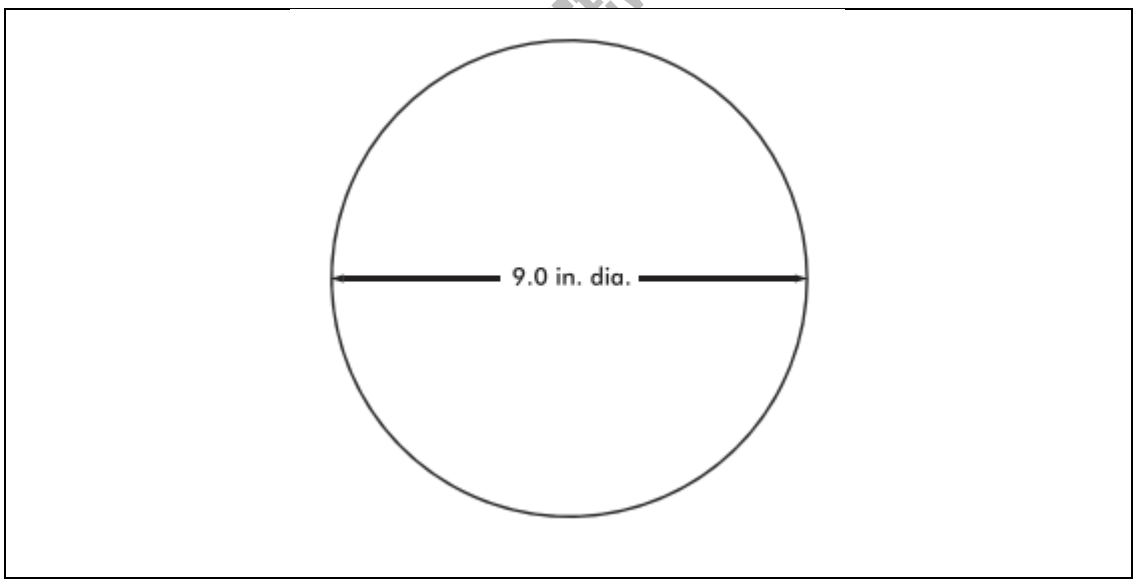

Figure B5 — Large head template

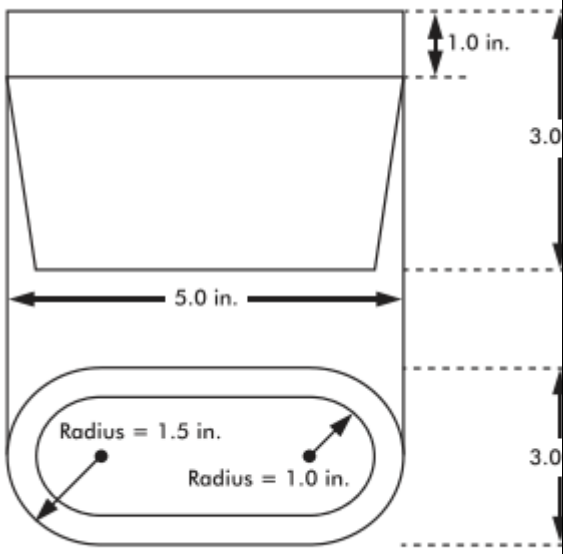

Figure B6 —Toddler small torso probe

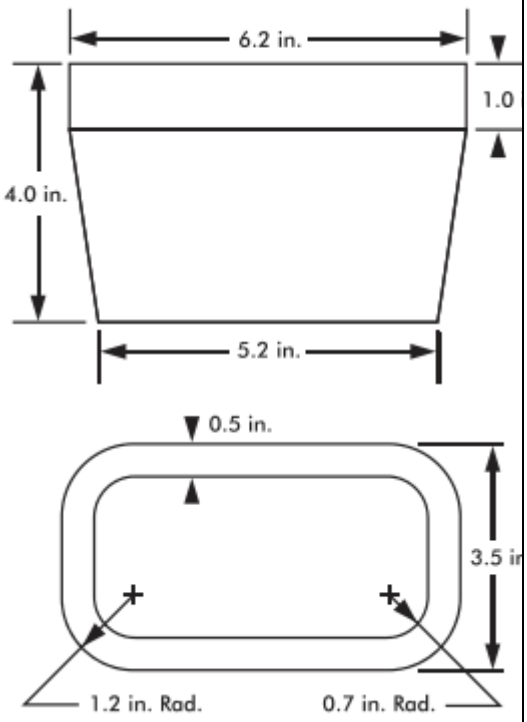

Figure B7. — Pre-school and school-age small torso probe

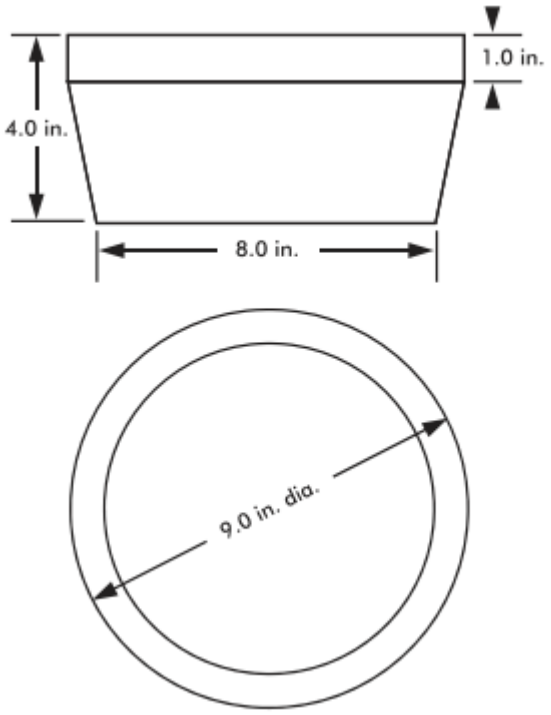

Figure B8 — Large head probe

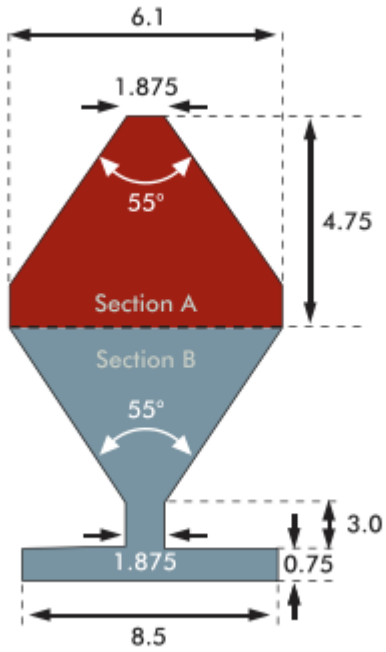

Figure B9 — Preschool/School-age partially bound probe (dimensions in inches, template is 0.75 inches thick)

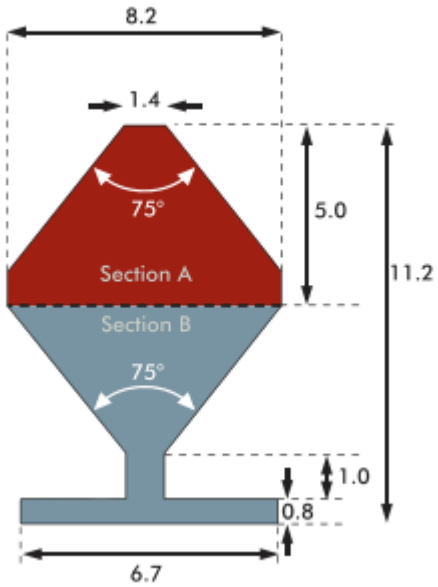

Figure B10 — Toddler partially bound probe (dimensions in inches, template is 0.60 inches thick)

B.2 Test Methods

B.2.1 Determining whether a projection is a protrusion

B.2.1.1 Test procedure

Step 1: Successively place each projection test gauge (see Figure B1) over any projection

Step 2: Visually determine if the projection penetrates through the hole and beyond the face of the gauge (see Figure B11 below).

Pass: A projection that does not extend beyond the face of the gauge passes.

Fail: A projection that extends beyond the face of any one of the gauges is considered a hazardous protrusion and should be eliminated.

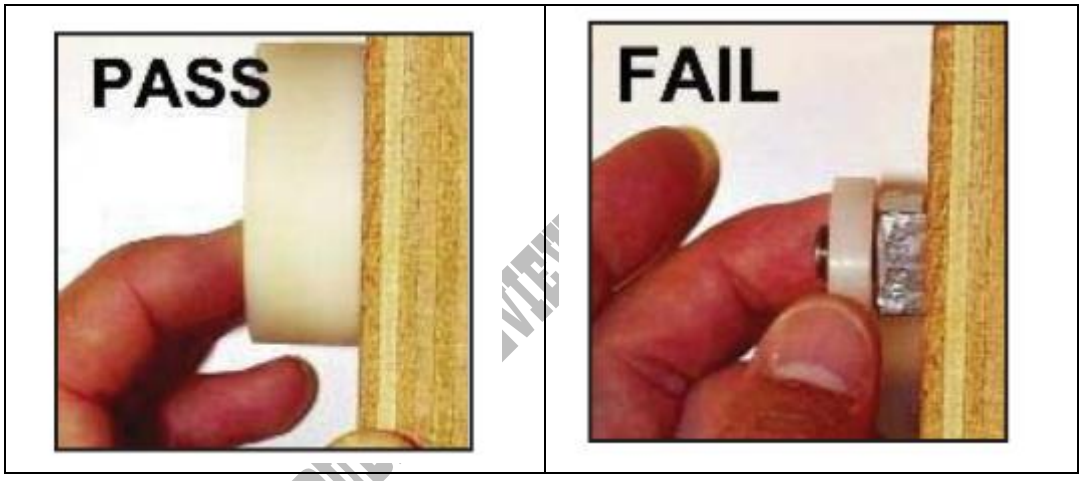

Figure B11 — Determining whether a projection is a protrusion

B.2.2 Projections on suspended members of swing assemblies

Given the potential for impact incidents, projections on swings can be extremely hazardous. A special test gauge (see Figure B2) and procedure are recommended. When tested, no bolts or components in the potential impact region on suspended members should extend through the hole beyond the face of the gauge.

B.2.2.1 Test procedure

Step 1: Hold the gauge (Figure B2) vertically with the axis through the hole parallel to the swing's path of travel.

Step 2: Place the gauge over any projections that are exposed during the swing's path of travel.

Step 3: Visually determine if the projection penetrates through the hole and beyond the face of the gauge.

Pass: A projection that does not extend beyond the face of the gauge passes.

Fail: A projection that extends beyond the face of the gauge is considered a hazardous protrusion and should be eliminated.

B.2.3 Projections on slides

To minimize the likelihood of clothing entanglement on slides, projections that (1) fit within any one of the three gauges shown in Figure B1 and (2) have a major axis that projects away from the slide bed should not have projections greater than 1/8 inch perpendicular to the plane of the surrounding surface (Figure B12).

B.2.3.1 Test procedure

Step 1: Identify all projections within the shaded area shown in Figure B13.

Step 2: Determine which, if any, fit inside the projection test gauges (Figure B1).

Step 3: Place the swing and slide projection gauge (Figure B2) next to the projection to check the height of the projection.

Step 4: Visually determine if the projection extends beyond the face of the slide projection gauge.

Pass: A projection that does not extend beyond the face of the gauge passes.

Fail: A projection that extends beyond the face of the gauge is considered a hazardous protrusion and should be eliminated.

NOTE: This test procedure is not applicable to the underside of a slide chute. For a slide chute with a circular cross section, the portion of the underside not subject to this projection recommendation is shown in Figure 18. The general recommendations for projections in B.2.1 are applicable to the underside of the slide.

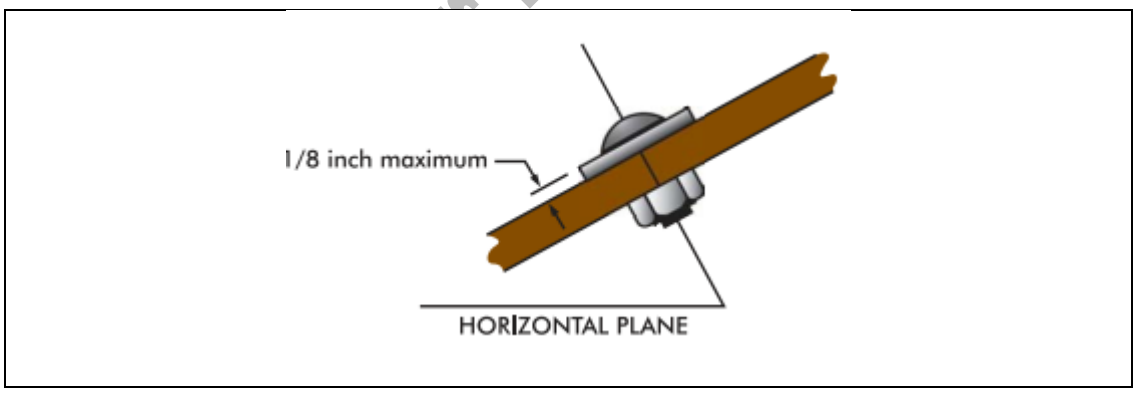

Figure B12 — Upward facing projection

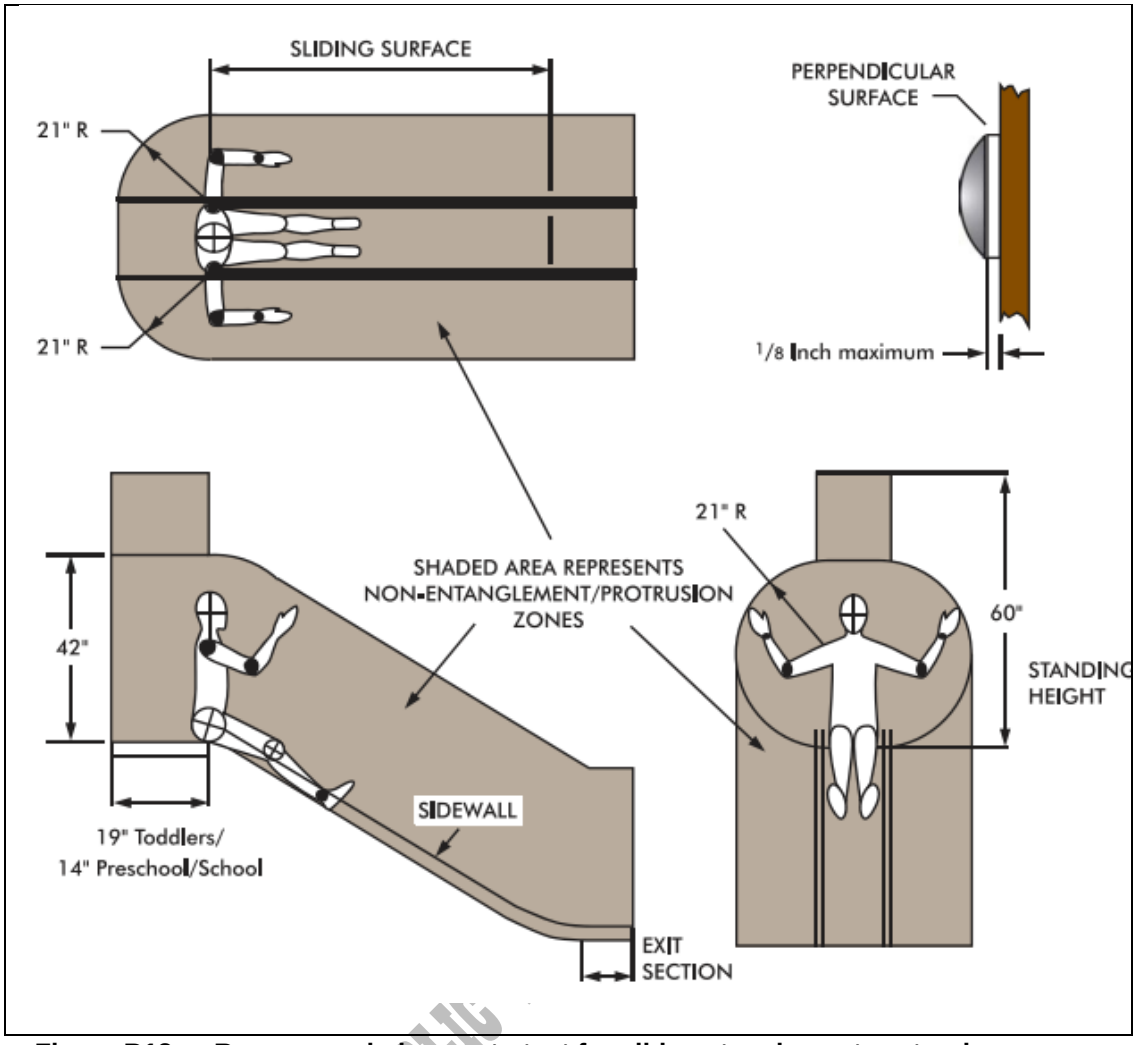

Figure B13 — Recommended areas to test for slide entanglement protrusions

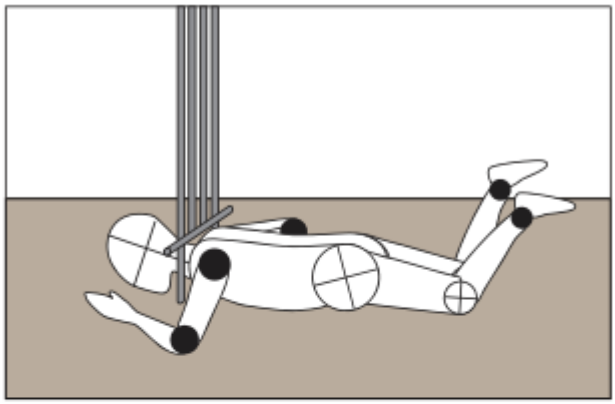

Ground-bounded: Not subject to entrapment recommendations.

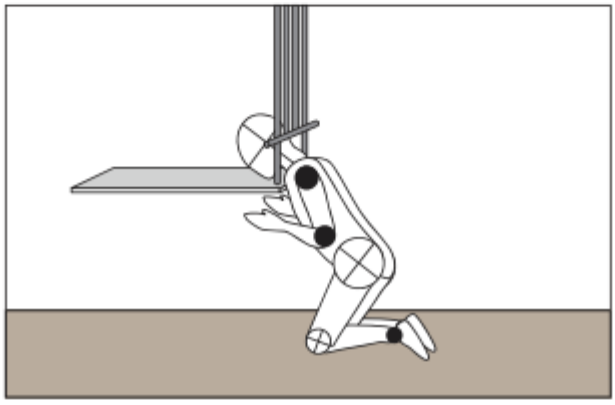

Low entrapment

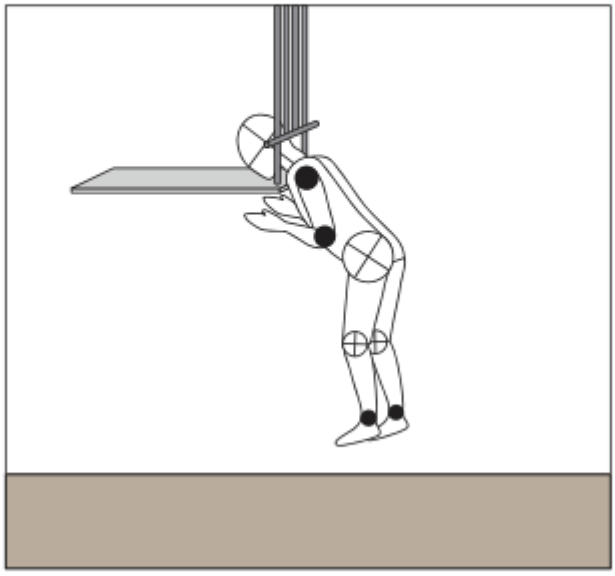

High entrapment

Figure B14 — Examples of completely bounded openings

B.2.4 Entrapment

B.2.1 General

Any completely-bounded opening (Figure B14) that is not bounded by the ground may be a potential head entrapment hazard. Even those openings which are low enough to permit a child's feet to touch the ground present a risk of strangulation to an entrapped child, because younger children may not have the necessary intellectual ability and motor skills to withdraw their heads, especially if scared or panicked. An opening may present an entrapment hazard if the distance between any interior opposing surfaces is greater than 3.5 inches and less than 9 inches. If one dimension of an opening is within this potentially hazardous range, all dimensions of the opening should be considered together to fully evaluate the possibility of entrapment. The most appropriate method to determine whether an opening is hazardous is to test it using the following fixtures, methods, and performance criteria.

These recommendations apply to all playground equipment, i.e., toddler, preschool-age, and school-age children. Fixed equipment as well as moving equipment (in its stationary position) should be tested for entrapment hazards. There are two special cases for which separate procedures are given:

(1) completely-bounded openings where depth of penetration is a critical issue (see Figure B15) and
(2) openings formed by flexible climbing components.

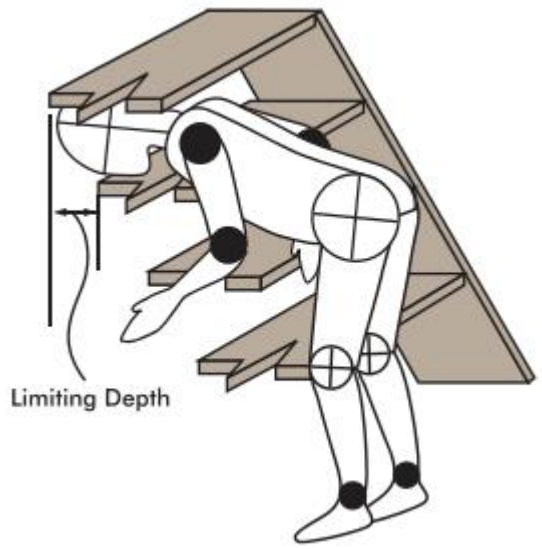

Figure B15 — Completely bounded opening with limited depth

B.2.5 Test fixtures

Two templates are required to determine if completely bounded openings in rigid structures present an entrapment hazard. These templates can easily be fabricated from cardboard, plywood, or sheet metal.

B.2.5.1 Small torso template

The dimensions (see Figure B3 and Figure B4) of this template are based on the size of the torso of the smallest user at risk (5th percentile 6-month-old child for Figure B3 and 2- year-old child for Figure B4). If an opening is too small to admit the template, it is also too small to permit feet first entry by a child. Because children's heads are larger than their torsos, an opening that does not admit the small torso template will also prevent headfirst entry into an opening by a child.

B.2.5.2 Large head template

The dimensions (see Figure B5) of this template are based on the largest dimension on the head of the largest child at risk (95th percentile 5-year-old child). If an opening is large enough to permit free passage of the template, it is large enough to permit free passage of the head of the largest child at risk in any orientation. Openings large enough to permit free passage of the large head template will not entrap the chest of the largest child at risk.

B.2.5.3 Completely bounded openings with unlimited depth

B.2.5.3.1 Test procedure

Step 1: Select the appropriate small torso template based on the intended users of the playground (Figure B3 for toddler playgrounds, Figure B4 for preschool and school-age playgrounds).

Step 2: Identify all completely bounded openings.

Step 3: Attempt to place the small torso template in the opening with the plane of the template parallel to the plane of the opening. While keeping it parallel to the plane of the opening, the template should be rotated to its most adverse orientation (i.e., major axis of template oriented parallel to the major axis of the opening.)

Step 4: Determine if the small torso template can freely pass through the opening.

Step 5: Place the large head template in the opening, again with the plane of the template parallel to the plane of the opening and try to insert it through the opening.

Pass: The large head template can be freely inserted through the opening

Fail: The opening admits the small torso template but does not admit the large head template.

B.2.5. Completely bounded openings with limited depth of penetration

The configuration of some openings may be such that the depth of penetration is a critical issue for determining the entrapment potential. For example, consider a vertical wall or some other barrier behind a step ladder. The entrapment potential depends not only on the dimensions of the opening between adjacent steps but also on the horizontal space between the lower boundary of the opening and the barrier.

A child may enter the opening between adjacent steps feet first and may proceed to pass through the space between the rear of the lower step and the barrier and become entrapped when the child's head is unable to pass through either of these two openings. In effect, there are openings in two different planes, and each has the potential for head entrapment and should be tested.

Figure B16 illustrates these two planes for a step ladder as well as for a generic opening. Plane A is the plane of the completely bounded opening in question, and Plane B is the plane of the opening encompassing the horizontal space between the lower boundary of the opening in Plane A and the barrier that should also be tested for entrapment hazards.

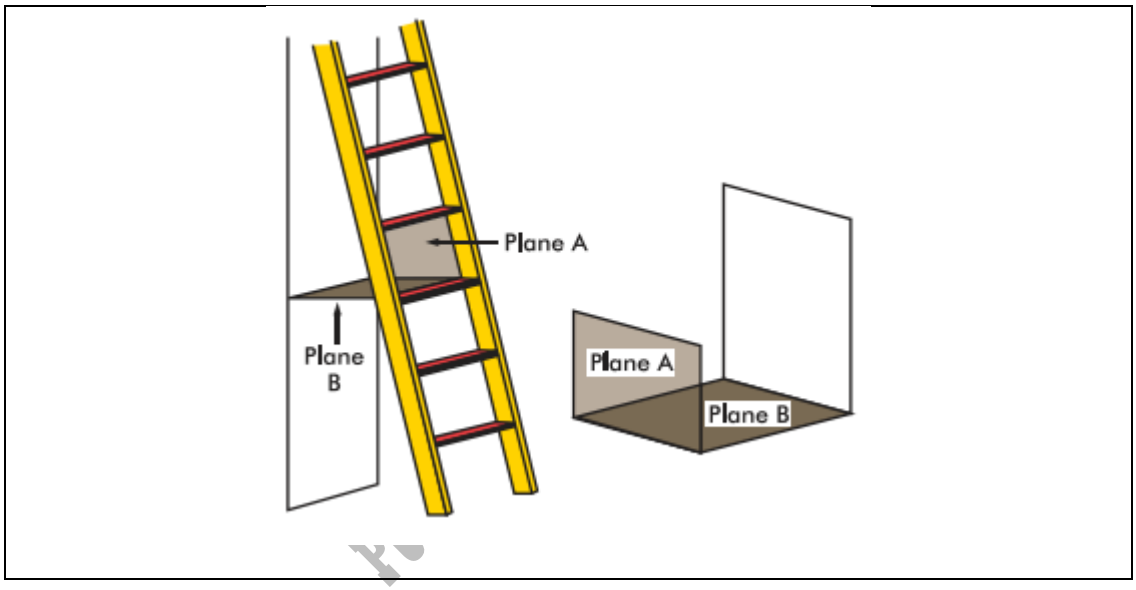

Figure B16 — Example of a completely bounded opening with limited depth of penetration

B.2.5.4.1 Test procedure

Step 1: Select the appropriate small torso template based on the intended users of the playground (Figure B3 for toddler playgrounds, Figure B4 for preschool-age and school-age playgrounds).

Step 2: Identify all completely bounded openings with limited depth of penetration.

Step 3: Place the small torso template in the opening in Plane A with its plane parallel to Plane A; rotate the template to its most adverse orientation with respect to the opening while keeping it parallel to Plane A.

Step 4: Determine if the opening in Plane A admits the small torso template in any orientation when rotated about its own axis.

No: Pass. The opening is small enough to prevent either head first or feet first entry by the smallest user at risk and is not an entrapment hazard.

Yes: **Continue**.

Step 5: Place the small torso template in the opening in Plane B with its plane parallel to Plane B; rotate the template to its most adverse orientation with respect to the opening while keeping it parallel to Plane B.

Step 6: Determine if the opening in Plane B admits the small torso template.

No: Pass. The depth of penetration into the opening in Plane A is insufficient to result in entrapment of the smallest user at risk.

Yes: **Continue**.

Step 7: Place the large head template (Figure B5) in the opening in Plane A with its plane parallel to Plane A. Determine if the opening in Plane A admits the large head template.

No: Fail. A child, whose torso can enter the opening in Plane A as well as the opening in Plane B, may become entrapped by the head in the opening in Plane A.

Yes: Continue.

Step 8: With the plane of the large head template parallel to the opening in Plane B, determine if the opening in Plane B admits the large head template.

No: Fail. The largest user at risk cannot exit the opening in Plane B.

Yes: Pass. The openings in Plane A and Plane B do not pose an entrapment risk.

B.2.5.5 Flexible openings

Climbing components such as flexible nets are also a special case for the entrapment tests because the size and shape of openings on this equipment can be altered when force is applied, either intentionally or simply when a child climbs on or falls through the openings. Children are then potentially at risk of entrapment in these distorted openings.

The procedure for determining conformance to the entrapment recommendations for flexible openings requires two three-dimensional test probes which are illustrated in Figure B6, Figure B7, and Figure B8 are applied to an opening in a flexible component with a force of up to 50 pounds.

B.2.5.5.1 Test procedure

Step 1: Select the appropriate small torso template based on the intended users of the playground (Figure B3 for toddler playgrounds, Figure B4 for preschool-age and school-age playgrounds).

Step 2: Identify all completely bounded openings with flexible sides.

Step 3: Place the small torso probes (Figures B6 and B7) in the opening, tapered end first, with the plane of its base parallel to the plane of the opening.

Step 4: Rotate the probe to its most adverse orientation (major axis of probe parallel to major axis of opening) while keeping the base parallel to the plane of the opening.

Step 5: Determine if the probe can be pushed or pulled completely through the opening by a force no greater than 30 pounds on toddler playgrounds or 50 pounds on preschool-age and school-age playgrounds.

No: Pass. Stop	Yes: Continue.
	

Step 6: Place the large head probe (Figure B8) in the opening with the plane of its base parallel to the plane of the opening.

Step 7: Determine if the large head probe can be pushed or pulled completely through the opening by a force no greater than 30 pounds on toddler playgrounds or 50 pounds on preschool-age and school-age playgrounds.

Yes: Pass. Stop.	No: Fail.
	

B.2.5. Partially bound openings

A partially bound opening is any opening which has at least one side or portion open, such as a U- or V-shaped opening. These openings can still pose an entrapment hazard by allowing the neck to enter but not allowing the head to slip out.

A partially bound opening can be any part of the playground equipment where a child could get his or her neck caught, so it includes not only two- or three-sided openings, but also areas of large openings (large enough for the head template to enter) that have the characteristics that can entrap a child's neck. Several examples outlines of this situation are shown in the figures below.

Openings that have an outline similar to these figures are often found when two parts of a playground meet, for example, the top of a slide and the side of a guardrail.

Identifying partially bound openings varies depending on the age range of the playground. Openings that should be tested include any opening where:

For toddlers:

— The perimeter of the opening is not closed

— The lowest leg of the opening is tilted upward (i.e., above horizontal) or 45 degrees below horizontal.

For preschool- and school-age:

— The perimeter of the opening is not closed
— The lowest leg of the opening is tilted upward (i.e., above horizontal)

Examples of partially bound openings. Note, these examples are intended to illustrate the principle of partially bound openings and may or may not require testing.

B.2.5.6.1 Test procedure

Step 1: Select the appropriate Partially Bound Template based on the intended users of the playground (Figure B10 for toddler playgrounds, Figure B9 for preschool and school-age playground).

Step 2: Identify partially bound openings.

Step 3: Align the template so that the face of the template is parallel to the plane of the opening and the narrow tip of the A section is pointing toward the opening

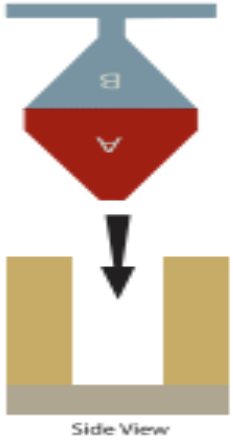

Openings shown are for example purposes only. Yours may be shaped or oriented differently.

Step 4: Insert the A portion of the template into the opening following the centerline of the opening.

Step 5: Once inserted as far as possible, determine if there is simultaneous contact between the sides of the opening and both of the top corners at the narrow tip of section A.

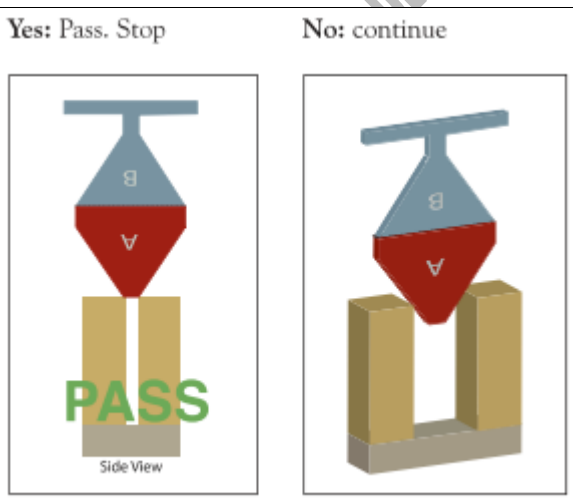

Step 6: While still inserted as far as possible, determine if there is simultaneous contact between both of the angled sides of section A and the sides of the opening.

Yes: Note the points

No: Pass. The narrow on the sides of tip should be opening where resting on the contact was made lower boundary of and continue the opening with no contact with the sides of the opening. Stop

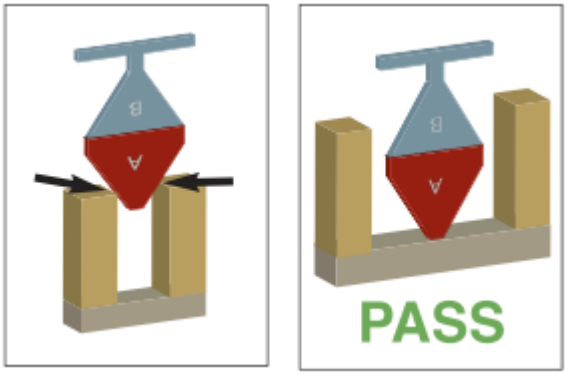

Step 7: Remove the template and turn the template so that the face of the template is perpendicular to the opening.

Step 8: Following the plane of the opening, insert the B portion of the template into the opening so that the narrow part of the B portion is between the sides of the opening.

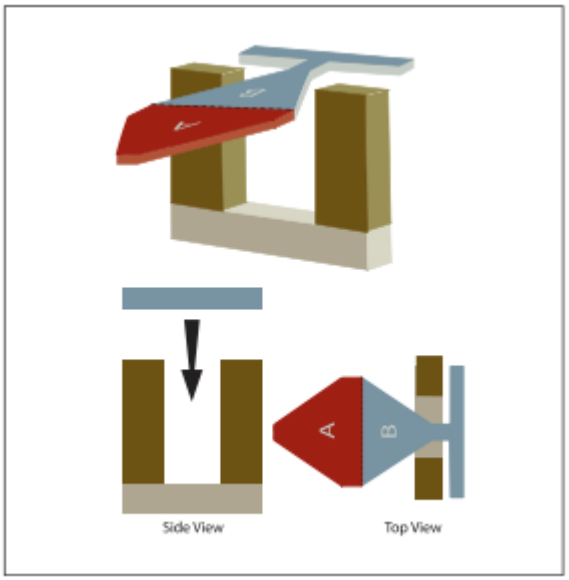

Step 9: Once inserted as far as possible, determine if the B portion is completely past the points where contact was made on the sides of the opening with the A portion.

No: Pass. Stop	Yes: Toddlers: Fail. Stop Preschool and School-age: Continue
	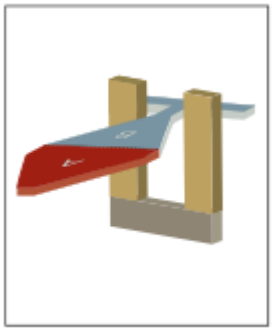

Step 10: Determine if the B portion can reach a point where the opening increases in size.

No: Fail. Stop	Yes: continue
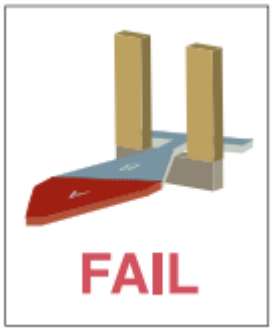	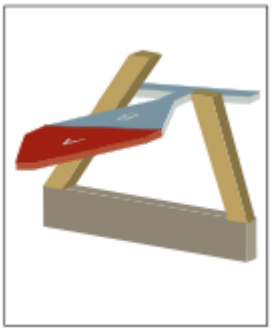

Step 11: Determine if the Large Head Template passes freely through the larger opening.

Yes: Pass	No: Fail