Department
for Environment
Food & Rural Affairs

Llywodraeth Cymru
Welsh Government

Draft Regulator Specifications and Regulator Specification Test Code Sheets

Date: December 2022

We are the Department for Environment, Food and Rural Affairs. We're responsible for improving and protecting the environment, growing the green economy, sustaining thriving rural communities and supporting our world-class food, farming and fishing industries.

We work closely with our 33 agencies and arm's length bodies on our ambition to make our air purer, our water cleaner, our land greener and our food more sustainable. Our mission is to restore and enhance the environment for the next generation, and to leave the environment in a better state than we found it.

This publication is available at www.gov.uk/government/publications

Any enquiries regarding this publication should be sent to us at

Department for Environment, Food and Rural Affairs,
Water Services Team,
Ground Floor,
Seacole Building,
2 Marsham Street,
London,
SW1P 4DF

Or email at: drinkingwaterquality@defra.gov.uk

www.gov.uk/defra

Contents

Regulator Specifications:

Specification for the prevention of Backflow

Department
for Environment
Food & Rural Affairs

Llywodraeth Cymru
Welsh Government

Draft Specification on the Prevention of Backflow

Specification for backflow prevention devices and arrangements

Date: December 2022

We are the Department for Environment, Food and Rural Affairs. We're responsible for improving and protecting the environment, growing the green economy, sustaining thriving rural communities and supporting our world-class food, farming and fishing industries.

We work closely with our 33 agencies and arm's length bodies on our ambition to make our air purer, our water cleaner, our land greener and our food more sustainable. Our mission is to restore and enhance the environment for the next generation, and to leave the environment in a better state than we found it.

This publication is available at www.gov.uk/government/publications

Any enquiries regarding this publication should be sent to us at

Department for Environment, Food and Rural Affairs,
Water Services Team,
Ground Floor,
Seacole Building,
2 Marsham Street,
London,
SW1P 4DF

Or email at: drinkingwaterquality@defra.gov.uk

www.gov.uk/defra

Contents

Introduction

The Water Supply (Water Fittings) Regulations 1999 [1] (the 'Regulations'), have the specific purpose to prevent the waste, misuse, undue consumption, contamination or erroneous measurement of public water supplies, meaning those supplied by a water undertaker (an appointed water company) or a water supply licensee [2].

The Regulations apply to any water fitting installed or used, or to be installed or used, in premises to which water is or is to be supplied by a water undertaker or water supply licensee.

---

[1] The Water Supply (Water Fittings) Regulations 1999 - https://www.legislation.gov.uk/uksi/1999/1148/contents

[2] Ofwat: Licence and licensee holders - www.ofwat.gov.uk/regulated-companies/ofwat-industry-overview/licences/

The Regulations set out the legal requirements for plumbing systems and play an important role in protecting public health, safeguarding public water supplies and promoting the efficient use of water within premises. The Regulator, which is the Secretary of State or Welsh Ministers, can approve specifications to ensure fittings are of an appropriate quality and standard and suitable for the circumstances in which they are used. They can also approve specifications to ensure fittings are installed, connected, altered, repaired or disconnected in a workmanlike manner.

This specification sets out the different types of arrangements and devices available for preventing backflow and back-siphonage (see sections 2 and 3) and, in tables 1 and 2, those fluid categories for which each arrangement and device is suitable. This specification is accompanied by a series of Test Code Sheets.

Conformity testing

When using a Regulator Specification or standard to demonstrate conformity with Regulation 4(1)(a), that manufacturers should, as good practice, have in place a documented system of assessment of the performance of the backflow prevention arrangement or device. They should also have factory production controls to ensure consistency of manufacturing and product performance as described in the Construction Products Regulations 2011 as amended.

Schedule 2: Paragraph 15 Backflow prevention

15.

(1) Subject to the following provisions of this paragraph, every water system shall contain an adequate device or devices for preventing backflow of fluid from any appliance, fitting or process from occurring.

(2) Paragraph (1) does not apply to-

(a) a water heater where the expanded water is permitted to flow back into a supply pipe, or

(b) a vented water storage vessel supplied from a storage cistern,

where the temperature of the water in the supply pipe or the cistern does not exceed 25°C.

(3) The device used to prevent backflow shall be appropriate to the highest applicable fluid category to which the fitting is subject downstream before the next such device.

(4) Backflow prevention shall be provided on any supply pipe or distributing pipe-

(a) where it is necessary to prevent backflow between separately occupied premises, or

(b) where the water undertaker has given notice for the purposes of this Schedule that such prevention is needed for the whole or part of any premises.

(5) A backflow prevention device is adequate for the purposes of paragraph (1) if it is in accordance with a specification approved by the regulator for the purposes of this Schedule.

Backflow prevention arrangements and devices

1. General interpretation of terms relating to backflow prevention

"**An air gap**" means a visible, unobstructed and complete physical air break between the lowest level of water discharge and the level of potentially contaminated fluid downstream (critical water level) within a cistern, vessel, fitting or appliance, hereinafter called a receptacle, that:

(a) is not less than 20 mm or twice the internal diameter of the inlet pipe whichever is the greater; and

(b) from which water discharges at not more than 15° from the vertical centreline of the water stream.

"**Critical level**" means the physical or piezometric level of the fluid in any part of the receptacle two seconds after closing the water inlet, starting from maximum water level.

"**Maximum level**" means the highest physical or piezometric level of the fluid reached in any part of the receptacle when operated continuously under fault conditions.

"**Spillover level**" means the level at which the fluid in a receptacle will first spill over the top edge of a receptacle if the inflow of water exceeds the outflow through any outlet and any overflow pipe.

"**Tap gap**" means the vertical distance between the lowest part of a tap outlet and the spillover level of the appliance or receptacle over which the tap discharges.

An "**upstand**" means either one of two alternative arrangements of water fittings to prevent backflow by back-siphonage:

Type A upstand	An upward flowing supply or distributing pipe surmounted by an anti-vacuum valve (Type DA), or an anti-vacuum valve combined with a single check valve (Type DUK1), any part of the outlet of which is located not less than 300mm above the spillover level of an appliance
Type B upstand	A branch pipe serving an appliance, where the height of any part of the branch connection to the vented distributing pipe is not less than 300 mm above: a. the spillover level of the appliance; or b. the highest possible discharge point served by the vented distributing pipe, whichever is the highest.

"**A verifiable backflow prevention device**" means a device, consisting of one or more backflow prevention elements, which can be tested in-situ; usually achieved by the provision of test ports immediately upstream, and between, the mechanical elements comprising the device.

"**flushing device**" means a device fitted to a flushing cistern to provide controlled measured volume(s) of water for flushing the receiving vessel (e.g. to a WC pan).

NOTE: A flushing device can be a siphon, drop valve, flap valve or pressurised cistern etc. For the purposes of this specification, the flushing device includes the activator (i.e. handle, button, linkages, etc.) and all seals, pistons, or other integral components.

2. Interpretations of backflow prevention arrangements as listed in Table 1

"**Type AA - Air gap with unrestricted discharge**" means a non-mechanical backflow prevention arrangement of water fittings where water is discharged through an air gap into a receptacle which has at all times an unrestricted spillover to the atmosphere.

"**Type AB - Air gap with weir overflow**" means a non-mechanical backflow prevention arrangement of water fittings complying with Type AA, except that the air gap is the vertical distance from the lowest point of the discharge orifice which discharges into the receptacle, to the critical level of the rectangular weir overflow.

"**Type AC - Air gap with vented submerged inlet and circular overflow**" means a non-mechanical backflow prevention arrangement of water fittings with a vented, but submerged, inlet; the air gap being measured vertically downwards from the lowest point of the air inlet to the critical level.

“**Type AD - Air gap with injector**” means a non-mechanical backflow prevention arrangement of water fittings with a horizontal injector and a physical air gap of 20 millimetres or twice the inlet diameter, whichever is the greater.

“**Type AF - Air gap with circular overflow**” means a non-mechanical backflow prevention arrangement of water fittings with an air gap measured downwards from the lowest point of the discharge orifice, which discharges into the receptacle, to the critical level.

“**Type AG - Air gap arrangement with minimum size circular overflow**” means a non-mechanical backflow prevention arrangement of water fittings with an air gap; together with an overflow, the size of which is determined by measure or a vacuum test.

“**Type AUK1 - Air gap with interposed cistern**” means a non-mechanical backflow prevention arrangement consisting of a cistern with a Type AG overflow and an air gap; the spillover level of the receiving vessel (WC pan or other receptacle) being located not less than 300 millimetres below the overflow pipe and not less than 15 millimetres below the lowest level of the interposed cistern.

> Note in the case of WC suites within the Regulator’s Specification Test Code Sheet 2213.14 (Type AUK1 air gaps), reference to the distance from the spillover level of the receiving vessel and the invert of the “warning pipe” can be taken to be the dimension from the spillover level of the receiving vessel and invert of the overflow pipe.

“**Type AUK2 - Domestic tap gap**” means the height of air gap between the lowest part of the outlet of a tap, combination fitting, shower head or other fitting discharging over a domestic sanitary appliance or other receptacle, and the spillover level of that appliance, where a fluid category 2 or 3 risk is present downstream.

“**Type AUK3 - Higher risk tap gap**” means the height of an air gap between the lowest part of the outlet of a tap, combination fitting, shower head or other fitting discharging over any appliance or other receptacle, and the spillover level of that appliance, where a fluid category 4 or 5 risk is present downstream.

“**Type AUK4 - Air gap with interposed flushing cistern**” means a non-mechanical backflow prevention arrangement consisting of a flushing cistern feeding by gravity a receiving vessel; the interposed flushing cistern incorporating a Type AG or Type AC air gap; an overflow; the spillover level of the receiving vessel (e.g. WC pan) being located not less than 150 millimetres below the overflow pipe (or combined warning/overflow pipe), and not less than 15 millimetres below the internal spillover level with all devices (e.g. flushing valve and associated attachments) completely removed.

“**Type DC - Pipe interrupter with permanent atmospheric vent**” means a non-mechanical backflow prevention device with a permanent unrestricted air inlet, the device being installed so that the flow of water is in a vertical downward direction.

3. General interpretations of backflow prevention devices as listed in Table 2

"**Type BA - Verifiable backflow preventer with reduced pressure zone**" means a verifiable mechanical backflow prevention device consisting of an arrangement of water fittings with three pressure zones with differential obturators and that will operate when potential backflow conditions obtain or there is a malfunction of the valve.

"**Type CA - Non-verifiable disconnector with different pressure zones**" means a non-verifiable mechanical backflow prevention device which provides disconnection by venting the intermediate pressure zone of the device to the atmosphere when the difference of pressure between the intermediate zone and the upstream zone is not greater than 10% of the upstream pressure.

"**Type DA - Anti-vacuum valve (or vacuum breaker)**" means a mechanical backflow prevention device with an air inlet which is closed when water within the device is at or above atmospheric pressure but which opens to admit air if a vacuum occurs at the inlet to the device.

"**Type DB - Pipe interrupter with atmospheric vent and moving element**" means a mechanical backflow prevention device with an air inlet closed by a moving element when the device is in normal use but which opens and admits air if the water pressure upstream of the device falls to atmospheric pressure, the device being installed so that the flow of water is in a vertical, downward direction.

"**Type DUK1 - Anti-vacuum valve combined with a single check valve**" means a mechanical backflow prevention device comprising an anti-vacuum valve with a single check valve located upstream.

"**Type EA - Verifiable single check valve**" means a verifiable mechanical backflow prevention device which will permit water to flow from upstream to downstream but not in the reverse direction.

"**Type EB - Non-verifiable single check valve**" means a non-verifiable mechanical backflow prevention device which will permit water to flow from upstream to downstream but not in the reverse direction.

"**Type EC - Verifiable double check valve**" means a verifiable mechanical backflow prevention device consisting of two verifiable single check valves in series, which will permit water to flow from upstream to downstream but not in the reverse direction.

"**Type ED - Non-verifiable double check valve**" means a non-verifiable mechanical backflow prevention device consisting of two single check valves in series, which will permit water to flow from upstream to downstream but not in the reverse direction.

“**Type HA - Hose union backflow preventer**” means a mechanical prevention backflow device for fitting to the outlet of a hose union tap and consisting of a single check valve with air inlets that open if the flow of water ceases.

“**Type HC - Diverter with automatic return**” means a mechanical backflow prevention device used in bath/shower combination tap assemblies which automatically returns the bath outlet open to atmosphere if a vacuum occurs at the inlet to the device.

“**Type HUK1 - Hose union tap incorporating a double check valve**” means a hose union tap in which a double check valve has been incorporated into either the inlet or outlet of the tap.

“**Type LA - Pressurised air inlet valve**” means an anti-vacuum valve or vacuum breaker, similar to Type DA but suitable for conditions where the water pressure at the outlet of the device under normal conditions of use is greater than atmospheric.

“**Type LB - Pressurised air inlet valve combined with a check valve downstream**” means a mechanical backflow prevention device comprising a Type LA anti-vacuum valve and a single check valve located downstream.

Fluid category backflow prevention suitability for arrangements and devices

Table 1: Schedule of non-mechanical backflow prevention arrangements and the maximum permissible fluid category for which they are acceptable

Type	Description of backflow prevention arrangements and devices	Suitable for protection against fluid category	
		Back-pressure	Back-siphonage
AA	Air gap with unrestricted discharge above spillover level	5	5
AB	Air gap with weir overflow	5	5
AC	Air gap with vented submerged inlet	3	3
AD	Air gap with injector	5	5

Type	Description of backflow prevention arrangements and devices	Suitable for protection against fluid category	
		Back-pressure	Back-siphonage
AF	Air gap with circular overflow	4	4
AG	Air gap with minimum size circular overflow determined by measure or vacuum test	3	3
AUK1	Air gap with interposed cistern (For example, a WC suite)	3	5
AUK2	Air gaps for taps and combination fittings (tap gaps) discharging over domestic sanitary appliances, such as a washbasin, bidet, bath or shower tray shall not be less than the following: Size of tap or combination fitting — Vertical distance of bottom of tap outlet above spillover level of receiving appliance Not exceeding G ½ — 20 mm Exceeding G ½ but not exceeding G ¾ — 25 mm Exceeding G ¾ — 70 mm	X	3
AUK3	Air gaps for taps or combination fittings (tap gaps) discharging over any higher risk domestic sanitary appliances where a fluid category 4 or 5 is present, such as: a any domestic or non-domestic sink or other appliance; or b any appliances in premises where a higher level of protection is required, such as some appliances in hospitals or other health care premises, shall be not less than 20 mm or twice the diameter of the inlet pipe to the fitting, whichever is the greater.	X	5
AUK4	Air gap with interposed flushing cistern (for example in a WC suite)	3	5

Type	Description of backflow prevention arrangements and devices	Suitable for protection against fluid category	
		Back-pressure	Back-siphonage
DC	Pipe interrupter with permanent atmospheric vent	X	5

Notes:

1 X Indicates that the backflow prevention arrangement or device is not applicable or not acceptable for protection against backpressure for any fluid category within water installations in the UK.

2 Arrangements incorporating Type DC devices shall have no control valves on the outlet of the device; they shall be fitted not less than 300 mm above the spillover level of a WC pan, or 150 mm above the sparge pipe outlet of a urinal, and discharge vertically downwards .

3 Overflows and warning pipes shall discharge through, or terminate with, an air gap, the dimension of which should satisfy a Type AA air gap.

Table 2: Schedule of mechanical backflow prevention arrangements and the maximum permissible fluid category for which they are acceptable

Type	Description of backflow prevention arrangements and devices	Suitable for protection against fluid category	
		Back-pressure	Back-siphonage
BA	Verifiable backflow preventer with reduced pressure zone	4	4
CA	Non-verifiable disconnector with difference between pressure zones not greater than 10%	3	3
DA	Anti-vacuum valve (or vacuum breaker)	X	3

Type	Description of backflow prevention arrangements and devices	Suitable for protection against fluid category	
		Back-pressure	Back-siphonage
DB	Pipe interrupter with atmospheric vent and moving element	X	4
DUK1	Anti-vacuum valve combined with a single check valve	2	3
EA	Verifiable single check valve	2	2
EB	Non-verifiable single check valve.	2	2
EC	Verifiable double check valve	3	3
ED	Non-verifiable double check valve	3	3
HA	Hose union backflow preventer. Only permitted for use on existing hose union taps in house installations	2	3
HC	Diverter with automatic return (Normally integral with some domestic appliance applications only)	X	3
HUK1	Hose union tap which incorporates a double check valve. Only permitted for replacement of existing hose union taps in house installations	3	3
LA	Pressurised air inlet valve	X	2
LB	Pressurised air inlet valve combined with a check valve downstream	2	3

Type	Description of backflow prevention arrangements and devices	Suitable for protection against fluid category	
		Back-pressure	Back-siphonage

Notes:

1 X Indicates that the backflow prevention device is not acceptable for protection against backpressure for any fluid category within water installations in the UK.

2 Arrangements incorporating a Type DB device shall have no control valves on the outlet of the device. The device shall be fitted not less than 300mm above the spillover level of an appliance and discharge vertically downwards .

3 Types DA and DUK1 shall have no control valves on the outlet of the device and be fitted on a 300 mm minimum Type A upstand.

4 Relief outlet ports from Types BA and CA backflow prevention devices shall terminate with an air gap, the dimension of which should satisfy a Type AA air gap.

WC Suite Performance Specification

Department
for Environment
Food & Rural Affairs

Llywodraeth Cymru
Welsh Government

Draft WC Suite Performance Specifications

Specification for WC Suites delivering a single flush of 6 litres maximum or a dual-flush of 6 litres maximum and reduced flush of no greater than 2/3 of the maximum flush

Date: December 2022

We are the Department for Environment, Food and Rural Affairs. We're responsible for improving and protecting the environment, growing the green economy, sustaining thriving rural communities and supporting our world-class food, farming and fishing industries.

We work closely with our 33 agencies and arm's length bodies on our ambition to make our air purer, our water cleaner, our land greener and our food more sustainable. Our mission is to restore and enhance the environment for the next generation, and to leave the environment in a better state than we found it.

This publication is available at www.gov.uk/government/publications

Any enquiries regarding this publication should be sent to us at

Department for Environment, Food and Rural Affairs,
Water Services Team,
Ground Floor,
Seacole Building,
2 Marsham Street,
London,
SW1P 4DF

Or email at: drinkingwaterquality@defra.gov.uk

www.gov.uk/defra

Contents

Introduction

The Water Supply (Water Fittings) Regulations 1999[1] (the 'Regulations'), have the specific purpose to prevent the waste, misuse, undue consumption, contamination or erroneous measurement of public water supplies, meaning those supplied by a water undertaker (an appointed water company) or a water supply licensee [2].

The Regulations apply to any water fitting installed or used, or to be installed or used, in premises to which water is or is to be supplied by a water undertaker or water supply licensee.

The Regulations set out the legal requirements for plumbing systems and play an important role in protecting public health, safeguarding public water supplies and promoting the efficient use of water within premises. The Regulator, which is the Secretary of State or Welsh Ministers, can approve specifications to ensure fittings are of an appropriate quality and standard and suitable for the circumstances in which they are used. They can also approve specifications to ensure fittings are installed, connected, altered, repaired or disconnected in a workmanlike manner.

This specification sets out the performance and where necessary dimensional requirements expected from Water Closet (WC) suites and key components within them. These include inlet valves, flushing devices and flushing cisterns. This specification is accompanied by a series of Test Code Sheets.

Conformity testing

Manufacturers of WC suites or an independent component of a suite shall demonstrate they are of a suitable quality and standard through conformity with this specification.

In addition manufacturers should, as good practice, have in place a documented system of assessment of the performance of the product and factory production controls to ensure consistency of manufacturing and product performance as described in the Construction Products Regulations 2011 as amended.

---

[1] The Water Supply (Water Fittings) Regulations 1999 - https://www.legislation.gov.uk/uksi/1999/1148/contents

[2] Ofwat: Licence and licensee holders - www.ofwat.gov.uk/regulated-companies/ofwat-industry-overview/licences/

The expectation of this specification is that any element of a WC Suite offered for sale independently should enable other associated elements to meet the essential performance characteristics (parts 1 to 4) of this specification when combined to form a WC Suite.

Nonetheless, it is clearly unreasonable for the manufacturer of an independent component that may be used in a suite to ensure that the product would satisfy the requirements if installed with every other available other part that could make up a WC suite. Therefore, component manufacturers need to complete those tests relevant to their product and ensure that when installed as part of a whole WC suite their product would be capable of fulfilling the complete set of tests. Whosoever selects the components to form a WC suite should ensure that they form a compliant suite which satisfies all the tests in this specification (see Informative Annex).

Scope

This specification sets performance requirements and methods of test for WC suites designed to operate with either a pressure flushing valve or a flushing cistern incorporating some other flushing device. The WC Suite shall be capable of delivering a maximum flush volume of 6 litres or a dual-flush combining a maximum flush volume of 6 litres and a reduced flush volume no greater than two thirds of the maximum flush volume.

NOTE: This specification does not cover backflow prevention requirements (see Informative Annex), which need to be considered separately.

Normative references

This specification incorporates, by dated or undated reference, provisions from other publications. These normative references are cited at the appropriate places in the text and the publications are listed hereafter. For dated references, subsequent amendments to or revisions of any of these standards apply to this specification only when incorporated in it by amendment or revision. For undated references the latest edition of the standard referred to applies.

- BS 1212-2 Float operated valves - Specification for diaphragm type float operated valves (copper alloy body) (excluding floats).
- BS 1212-3 Float operated valves - Specification for diaphragm type float operated valves (plastics bodied) for cold water.
- BS 1212-4 Float operated valves - Specification for compact type float operated valves for WC flushing systems (including floats).
- TCS 1211.15 Flushing device physical endurance and leakage
- TCS 1411.3 Flushing device chemical endurance
- TCS 1511.2 Flush rate

- TCS 1512.10 Paper discharge for reduced flush volume
- TCS 1512.11 Solids discharge and after flush volume for maximum flush
- TCS 1512.12 Wash of Bowl
- TCS 1611.16 Liquid contaminant dye retention
- TCS 2212.20 Backflow prevention Regulator's specification for WC suites (anti-siphonage capability)
- TCS 2213.21 Joints below critical water level
- TCS 3212.1 WC flush volume and water seal depth
- TCS 5011.6 Water seal depth
- TCS 5011.7 Warning pipe and overflow provision
- TCS 6001.1 Marking for identification

Definitions

For the purposes of this specification the following definitions apply:

After-flush volume

Remaining flush water volume after the last of four specimens have left the outlet of the bowl.

Critical level

The physical or piezometric level of the fluid in any part of the receptacle two seconds after closing the water inlet, starting from maximum water level. [source the Regulations, Regulator's Specification on the Prevention of Backflow: 1 General interpretation of terms relating to backflow prevention]

Dual flush

Flushing cisterns with two modes of operation, one delivering a larger volume than the other, in which:

- the larger (full) flush option is not greater than 6 litres; and
- the reduced smaller flush option is not greater than two-thirds the volume of the larger flush.

Fluid contaminant

Liquid to be removed from WC pan by flushing action.

Flush volume

Volume of water discharged from the flushing device during a flush cycle.

> NOTE: In the case of devices that require a continuous water supply during flushing (e.g. for outlet seal and/or trap refill) the inflow during flushing forms part of the flush volume.

Flushing Device

Device fitted to a flushing cistern to provide controlled measured volume(s) of water to a WC for flushing.

> NOTE A flushing device can be a siphon, drop valve, flap valve or pressurised cistern etc. For the purposes of this specification, the flushing device includes the activator (i.e. handle, button, linkages, etc.) and all seals, pistons, or other integral components.

Inlet valve

Valve that controls and shuts off the flow of water into a flushing cistern, usually by an arm connected to a float.

Residual fluid contaminant

Liquid waste left behind in the WC bowl after completion of the flush.

Regulations

In this specification means the Water Supply (Water Fittings) Regulations 1999.

Regulator's Specification Test Code Sheet (TCS)

A technical specification which detail specific testing procedures which, either on their own or in combination with other TCSs, verify a water fitting(s) is of a suitable quality and standard and or in compliance with the requirements of the Regulations or accompanying Regulator's Specifications.

Solid test media

Media used to represent faecal matter.

Warning level

Level of spillover of a vertically mounted warning pipe connection or the invert of a horizontally mounted warning pipe connection, or the level at which an equally effective (warning) device would operate.

Warning pipe

Means an overflow pipe whose outlet is located in a position where the discharge of water can be readily seen. [source the Regulations, Schedule 2: Paragraph 25 (7): WC's, flushing devices and urinals].

Water trap

Water seal that prevents backflow of odour from a drain.

WC suite

WC Pan combined with either a flushing cistern with integral warning pipe connection -or a device deemed to be no less effective - and inlet/outlet devices, or a pressure flush valve, with WC and flushing device installed as a functioning unit.

Performance Requirements

General tolerances and measurements

In the absence of specific tolerances or accuracies for measuring instruments the following shall apply.

Tolerances and measurements

1. Dimension: up to and including 75 mm ±5%; over 75 mm ±2%.
2. Flow rate and pressure: ±5 % of the value specified.
3. Temperature: cold water ±10 °C of the value specified.

Accuracy of measuring instruments

All the measuring instruments shall have an error limit of ±2 % of the measured value.

Linear measuring instruments shall have a minimum resolution of 0.5 mm

Timing instruments shall have a minimum resolution of 0.1 seconds

Uncertainty of Measurement. When testing there should be in place a scheme of Uncertainty of Measurement to determine the budget range. The budget (See Figure 1) should account for the variations (instrumentation, equipment etc.) that might occur throughout all stages of the testing process. Where Uncertainty of Measurement budget is likely to cross over the acceptance limit given by the requirement, it should be reported with the test result.

Figure 1: Reporting uncertainty of measurement budgets

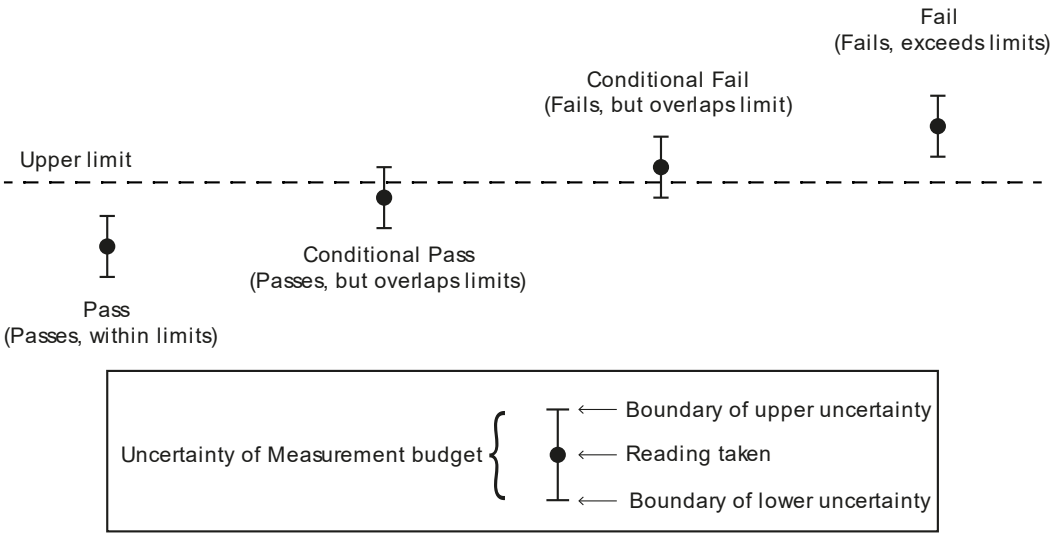

1 Inlet valve

An inlet valve for use within a WC suite, and satisfy this Specification, shall be of an appropriate quality and standard (see Regulation 4) complying with BS 1212 Parts 2, 3, or 4, subject to the following essential characteristics of: performance (1.1), anti-siphonage capability (1.2) and have no joints below the critical water level (1.3).

1.1 Performance

1.1.1 Requirement

Inlet valves shall comply with BS 1212 Parts 2, 3, or 4, subject to the amendments specified below:

<u>Water quality</u>

- The water hardness during tests shall not exceed the range of 230 ±20 ppm of calcium carbonate during the course of the test.

<u>Endurance</u>

- The endurance test shall be undertaken for 200,000 cycles; and if the first inlet valve fails the test, the four valves subsequently tested must all satisfy the requirements.
- The supply pressure for the endurance test shall be 1.5 ±0.1 bar.
- Inlet valves to BS 1212-2:1990 shall be subject to an endurance test as described in BS 1212-3:1991 using a supply pressure of 1.5 ±0.1 bar.

1.1.2 Test method

i Apparatus

Apparatus as specified in BS 1212 subject to the additional requirements specified in Clause 1.1.1. Supply pressure requirements for pressurised cisterns shall conform with the manufacturer's recommendations.

ii Procedure

Subject the inlet valve to the tests as specified in BS 1212 Parts 2, 3, or 4 as appropriate. In testing against the endurance clause of BS 1212 (modified in Clause 1.1.1) if the first inlet valve fails, four further valves shall be tested.

iii Expression of results

Record compliance, or failure to comply with the requirements of the appropriate part of BS 1212 and Clause 1.1.1.

1.2 Anti-siphonage capability

1.2.1 Requirement

When tested in accordance with the requirements of Clause 1.2.2 there shall be no evidence of back-siphonage.

1.2.2 Test method

i. Apparatus and procedure

Inlet valves to BS 1212 part 2 or 3 shall be tested in accordance with Test Procedure 4 (A) of the Regulator’s Specification Test Code Sheet 2212.20.

Inlet valves to BS 1212 part 4 shall be tested in accordance with Test Procedure 4 (B) of the Regulator’s Specification Test Code Sheet 2212.20.

ii Expression of results

Record compliance, or failure to comply with the requirements of Clause 1.2.1.

1.3 Joints below the water line

1.3.1 Requirement

When tested as described in Clause 1.3.2 no ***mechanical joint*** within a flushing cistern on submerged supply pipes or inlet devices shall be at or below the critical water level.

Mechanical joints are joints which when undone open a direct pathway between the wholesome water (incoming supply) and the fluids stored within the flushing cistern. These include joints that:

a. are ‘adjustable’ or can be ‘dismantled’; or

b. rely on elastomeric, or other material, to provide a water-tight seal; or

c. where the coupling of two components being dependent upon mechanically applied forces, with or without the use of secondary seal.

Joints not considered *mechanical joints* include:

a. Nuts or jointing mechanism on the diaphragm housing assembly.

b. Joints where the joining surface are permanently fused together, for example by a chemical process or the application of heat.

1.3.2 Test method

i. Apparatus and procedure

The flushing cistern, complete with all fitments (e.g. inlet valve, flushing device, overflow etc.) installed in accordance with the manufacturer's instructions, shall be tested in accordance with Test Procedure 4 (A) of the Regulator’s Specification Test Code Sheet 2213.21.

ii. Expression of results

Record compliance, or failure to comply with the requirements of 1.3.1.

2 Flushing devices

2.1 Physical endurance and leakage

2.1.1 Requirement

When tested as described in Clause 2.2.1, the flushing device shall not undergo any failure or permanent distortion of any components including linkages that prevents normal operation of the mechanism.

No more than 2 instances of leakage are permitted. A leak is defined as being visible discharge of water amounting to more than 3 separate drops. If the first flushing device fails the test, the four devices subsequently tested must all satisfy the requirements.

2.1.2 Test method

i Apparatus and procedure

The flushing cistern, complete with fitments including flushing device, flushpipe (where appropriate) and cover, installed in accordance with the manufacturer's instructions shall be tested in accordance with Test Procedure 4.1 of the Regulator's Specification Test Code Sheet 1211.15.

In Test Code Sheet 1211.15 the following definitions shall apply:

> **Short term leak test** means a leak test consisting of a 15 minute wait after flushing then positioning paper designed to change colour when wet, under the flushing device for 10 minutes. A leak is defined as being visible discharge of water amounting to more than 3 separate drops.
>
> **Long term leak test** means a leak test consisting of a 2 hour wait after flushing then position paper, designed to change colour when wet, under the outlet for 15 minutes. A leak is defined as being visible discharge of water amounting to more than 3 separate drops.

ii Expression of results

Record compliance, or any failure to comply, with the requirements of Clause 2.1.1.

2.2 Chemical endurance

2.2.1 Requirement

When tested as described in Clause 2.2.2, there shall be:

- no dimensional alteration of any component greater than 1 mm or 5% whichever is the lesser;
- no weight loss of any component greater than 1 g or 5% whichever is the lesser;
- no visible sign of physical change such that performance is impaired;
- no deterioration in performance.

The flushing device shall not leak after undergoing a 3000 cycle physical endurance test and the long term leakage test (see 2.1.2 i).

2.2.2 Test method

i Apparatus and procedure

The flushing device shall be tested in accordance with Test Procedure 4 of the Regulator's Specification Test Code Sheet 1411.3.

In TCS 1411.3 the definition of *long term leak test* shall be taken as that given in 2.1.2 i above.

ii Expression of results

Record compliance, or any failure to comply with the requirements of Clause 2.2.1.

3 Flushing cisterns

3.1 Marking

3.1.1 Requirement

Every flushing cistern, other than a pressure flushing cistern, shall be clearly marked internally with an indelible line to show the intended volume of flush, together with an indication of that volume. Discharge volume(s) shall be based on measurement from the water level in the cistern using the manufacturer's original equipment to the residual water level in the cistern on completion of a flush.

3.1.2 Test method

i Apparatus and procedure

The flushing cistern shall be tested in accordance with the appropriate Test Procedure 4.1 (C) of the Regulator’s Specification Test Code Sheet 6001.1.

ii Expression of results

Record compliance, or any failure to comply with the requirements of Clause 3.1.1.

3.2 Warning and Overflow Pipe Provision

3.2.1 Requirement

i Point of discharge

When tested as described in Clause 3.2.2, every flushing cistern, not being a pressure flushing cistern, shall be arranged-

a) in the case of a combined warning and overflow pipe-

   i. with the discharge level between 20 mm and 51 mm inclusive, above the marked water level.

or

b) in the case of separate warning and overflow pipes-

   i. fitted with a warning pipe connection arranged with the discharge level between 20 mm and 41 mm inclusive, above the marked water level; and

   ii. the top edge of any internal overflow between 30 mm and 51 mm inclusive and not less than 10 mm above the warning level.

An alternative, no less effective device, may be used in place of a warning pipe.

ii Size of overflow and air gap to drain

In the case of an internal overflow within a WC suite, i.e. one that discharges into the flush pipe or bowl, requirements relating to the overflow size and the provision of air gaps to drain, need not apply provided:

a) the overflow is not less than 19 mm internal diameter at the point water enters the overflow to be discharged; and

b) the critical water level (h) has been verified by test.

3.2.2 Test method

i Apparatus and procedure

The flushing cistern with warning pipe connection or a device deemed to be no less effective and internal overflow, if provided, installed in accordance with the manufacturer's instructions, shall be tested in accordance with Test Procedure 4 (A) of the Regulator’s Specification Test Code Sheet 5011.7.

ii Expression of results

Record compliance or any failure to comply with the requirements of Clause 3.2.1.

3.3 Flush Volume

3.3.1 Requirement

i Full Flush

When tested as described in Clause 3.3.2 with any adjustable flushing device set to deliver the maximum flush volume, the measured discharge shall on no occasion exceed 6 litres.

ii Reduced flush

When tested as described in Clause 3.3.2 with any adjustable flushing device set to deliver a reduced flush volume, the measured discharge shall on no occasion exceed two thirds of the full flush volume.

3.3.2 Test method

i Apparatus and procedure

The flushing cistern, complete with fitments including flushpipe and cover, installed in accordance with the manufacturer's instructions, on a firm, flat, vertical surface shall be tested in accordance with Test Procedure 4 (A) of the Regulator’s Specification Test Code Sheet 3212.1.

ii Expression of results

Record compliance or any failure to comply with the requirements of Clause 3.3.1.

Note it is also possible to record any failure of the trap seal depth to conform with the requirements of Clause 4.5.1 4.13.

3.4 Flush rate

3.4.1 Requirement

When tested as described in Clause 3.4.2, the mean flush rate of discharge per flush shall be ≥1.85 L/s for the full-flush and ≥1.6 L/s for the reduced-flush - if provided.

3.4.2 Test method

i Apparatus and procedure

A flushing cistern, complete with fitments including flushpipe (where appropriate) and cover, installed in accordance with the manufacturer's instructions on a firm, flat, vertical surface, shall be tested in accordance with Test Procedure 4 (A) of the Regulator’s Specification Test Code Sheet 1511.2.

ii Expression of results

Record compliance or any failure to comply with the requirements of Clause 3.4.1.

4 Water Closet Suite

4.1 Solids discharge and after-flush volume for maximum flush

4.1.1 Requirement

When tested as described in Clause 4.1.2, for the first six flush cycles, or for a minimum of eight out of ten flush cycles, each of the four test specimens shall be completely evacuated from the WC bowl and pan's outlet. The recorded after-flush volume in each flush cycle shall be no less than 40% of the full flush volume.

4.1.2 Test method

i Apparatus and procedure

The WC pan with associated flushing cistern and/or flushing device, or a close-coupled/one-piece suite, satisfying the requirements of this specification, installed in accordance with the manufacturer's instructions on a firm, flat horizontal/vertical surface as appropriate, shall be tested in accordance with Test Procedure 4 (A) of the Regulator's Specification Test Code Sheet 1512.11.

In Test Code Sheet 1512.11 the following shall apply:

(a) in 4.2 b) the undated reference to "*Annex F of BS EN 997*" shall be taken as the "'*Preparation of test specimens' of BS EN 997 WC pans and WC suites with integral trap*"; and

(b) in 4.2 f) the timing device is to have an accuracy of 0.05 seconds; and

(c) in 4.2 g) reference to "*Figure 1*", and in 4.3 reference "*Figure 1 of AS 1172.1:1993*" can be taken as the directing device in Figure 2 below, with all dimensions given in millimetres.

Figure 2: Directing device

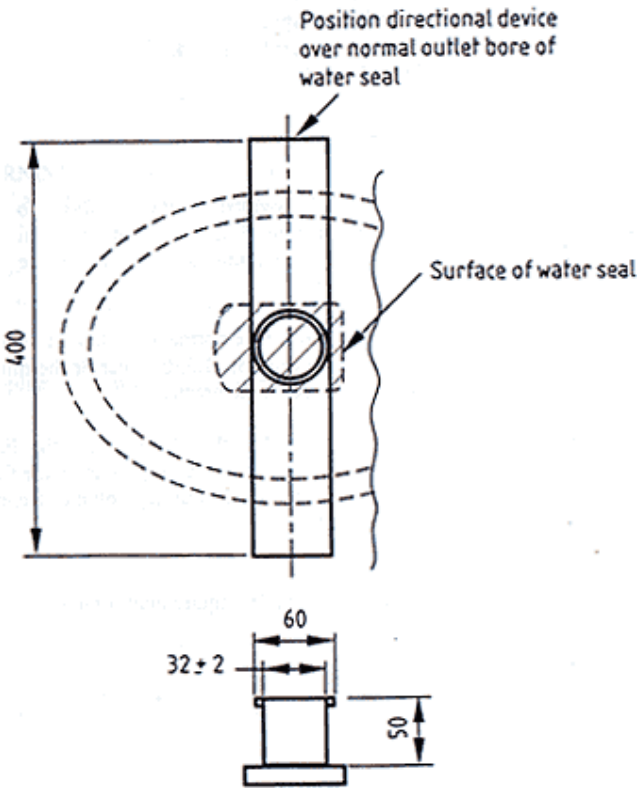

ii Expression of results

Record compliance, or any failure to comply with the requirements of Clause 4.1.1.

4.2 Paper discharge for reduced flush volume

4.2.1 Requirement

When tested as described in Clause 4.2.2, for the first six flush cycles, or for a minimum of eight out of ten flush cycles, all six sheets of toilet paper shall be flushed out of the WC pan and outlet.

4.2.2 Test method

i Apparatus and procedure

The WC pan with associated flushing cistern and/or flushing device (satisfying the requirements of this specification), or a close-coupled/one-piece suite, installed in accordance with the manufacturer's instructions on a firm, flat horizontal/vertical surface as appropriate, shall be tested in accordance with Test Procedure 4 (A) of the Regulator's Specification Test Code Sheet 1512.10.

In Test Code Sheet 1512.10 clause 4.2 b) the undated reference to "*Annex E of BS EN 997*" shall be taken as the "'*Basket method' of BS EN 997 WC pans and WC suites with integral trap*".

ii Expression of results

Record compliance or failure to comply with the requirements of Clause 4.2.1.

4.3 Liquid contaminant dye retention

4.3.1 Requirement

When tested as described in Clause 4.3.2, for the first five flush cycles, or for a minimum of nine out of ten flush cycles at full-flush volume, the contaminate level shall be ≤1%. For the first five flush cycles, or for a minimum of nine out of ten flush cycles at reduced-flush volume, when provided, the contaminate level shall be ≤6%.

4.3.2 Test method

i Apparatus and procedure

The WC pan with associated flushing cistern and/or flushing device (satisfying the requirements of this specification), or a close-coupled/one-piece suite, installed in accordance with the manufacturer's instructions on a firm, flat horizontal/vertical surface as appropriate, shall be tested in accordance with Test Procedure 4 (A) of the Regulator's Specification Test Code Sheet 1611.16.

ii Expression of results

Record compliance, or failure to comply with the requirements of Clause 4.3.1.

4.4 Wash of Bowl

4.4.1 Requirement

When tested as described in Clause 4.4.2 the arithmetic average of any unflushed area below the rim and above the surface of the trap shall be no greater than 50 cm^2 after 5 flushing operations. For rimless WC pans the surface to be tested is the area between the water surface of the trap and a horizontal line 85 mm below the top edge of the bowl.

4.4.2 Test method

i Apparatus and procedure

The WC pan with associated flushing cistern and/or flushing device (satisfying the requirements of this specification), or a close-coupled/one-piece suite, installed in

accordance with the manufacturer's instructions on a firm, flat horizontal/vertical surface as appropriate, shall be tested in accordance with Test Procedure 4 (A) of the Regulator's Specification Test Code Sheet 1512.12.

ii Expression of results

Record compliance, or any failure to comply with the requirements of Clause 4.4.1.

4.5 Water seal depth

4.5.1 Requirement

When tested twice as described in Clause 4.5.2, the water seal depth shall be no less than 50 mm on either occasion. If any alternative trap seal device is utilised, a no less effective comparable seal shall be in operation.

4.5.2 Test method

i Apparatus and procedure

The WC pan with associated flushing cistern and/or flushing device, or a close-coupled/one-piece suite, all meeting the appropriate requirements of this standard, installed in accordance with the manufacturer's instructions on a firm, flat horizontal/vertical surface as appropriate shall be tested in accordance with either:

(a) Test Procedure 4 (A) of the Regulator's Specification Test Code Sheet 3212.1, if combined with the flush volume test (see 3.3.2); or

(b) Test Procedure 4 (A) of the Regulator's Specification Test Code Sheet 5011.6.

ii Expression of results

Record compliance, or failure to comply with the requirements of Clause 4.5.1.

Informative Annex - Summary Requirements for Compatibility Testing

This annex provides further background notes on the testing and compatibility of elements of the WC suite for the purposes of this specification.

Users should note WC suites will require appropriate backflow protection in addition to conformance with this specification. This can be incorporated within the design of the WC suite. Backflow prevention requirements are set out in paragraph 15 of Schedule 2 of the Regulations. The Specification on the Prevention of Backflow details appropriate arrangements within Table 1 which includes Type AUKWC arrangements specifically for use with flushing cisterns and subject to certain characteristics compatibility testing. Where backflow prevention is not incorporated within the design, separate backflow prevention arrangement will be required on the upstream supply

Inlet valves must satisfy BS 1212 as modified in section 1 and have no joints below the critical water level.

Flushing devices must satisfy the requirements with regard to physical and chemical endurance. They must also be capable of satisfying the flush volume test at full and, if appropriate, reduced flush volumes. They should also be capable of contributing towards the other requirements when tested in combination.

Cisterns must consist of compliant components and so satisfy warning pipe and overflow provisions and the flush volume test. They should be suitably marked for the intended full and, if appropriate, reduced flush volume of the WC pan. They should also be capable of contributing towards the other requirements when tested in combination.

WC pans must, for their intended flush volume, satisfy the requirements regarding solid and paper discharge; after-flush volume; liquid dye contaminant retention; wash of bowl and trap seal depth.

The whole WC suite must comprise of fully compliant components which, when installed together, satisfy all the tests.

It should be noted that when undertaking tests involving more than one component of a WC suite, components which could adversely affect the results of the whole test should not be changed without re-starting that test.

Regulator Specification Test Code Sheets:

Test Code Sheet 1511.2 Flush Rate

1. PURPOSE

Flushing Cisterns: Flush Rate verification as described in WC Suite Performance Specifications.

2. TYPE OF TEST(S)

Flush Rate.

3. WATER REGULATIONS REQUIREMENTS FOR FITTINGS

Schedule 2

25. (1) Subject to the following provisions of this paragraph-

a. every water closet pan shall be supplied with water from a flushing cistern, pressure flushing cistern or pressure flushing valve, and shall be so made and installed that after normal use its contents can be cleared effectively by a single flush of water, or, where the installation is designed to receive flushes of different volumes, by the largest of those flushes;

b. no pressure flushing valve shall be installed-

i. in a house, or

ii. in any building not being a house where a minimum flow rate of 1.2 litres per second cannot be achieved at the appliance;

c. where a pressure flushing valve is connected to a supply pipe or distributing pipe, the flushing arrangement shall incorporate a backflow prevention device consisting of a permanently vented pipe interrupter located not less than 300mm above the spillover level of the WC pan or urinal:

d. no flushing device installed for use with a WC pan shall give a single flush exceeding 6 litres;

e. no flushing device designed to give flushes of different volumes shall have a lesser flush exceeding two-thirds of the largest flush volume;

f. every flushing cistern, other than a pressure flushing cistern, shall be clearly marked internally with an indelible line to show the intended volume of flush, together with an indication of that volume;

g. a flushing cistern designed to give flushes of different volumes-

i. shall have a readily discernible method of actuating the flush of different volumes; and

ii. shall have instructions, clearly and permanently marked on the cistern or displayed nearby, for operating it to obtain the different volumes of flush;

h. every flushing cistern, not being a pressure flushing cistern or a urinal cistern, shall be fitted with a warning pipe or with a no less effective device;

i. every urinal that is cleared by water after use shall be supplied with water from a flushing device which-

i. in the case of a flushing cistern, is filled at a rate suitable for the installation;

ii. in all cases, is designed or adapted to supply no more water than is necessary for effective flow over the internal surface of the urinal and for replacement of the fluid in the trap; and

j. except in the case of a urinal which is flushed manually, or which is flushed automatically by electronic means after use, every pipe which supplies water to a flushing cistern or trough used for flushing a urinal shall be fitted with an isolating valve controlled by a time switch and a lockable isolating valve, or with some other equally effective automatic device for regulating the periods during which the cistern may fill.

(2) Every water closet, and every flushing device designed for use with a water closet, shall comply with a specification approved by the regulator for the purposes of this Schedule.

(3) The requirements of sub-paragraphs (1) and (2) do not apply where faeces or urine are disposed of through an appliance that does not solely use fluid to remove the contents.

(4) The requirement in sub-paragraph (1)(i) shall be deemed to be satisfied-

a) in the case of an automatically operated flushing cistern servicing urinals which is filled with water at a rate not exceeding-

i. 10 litres per hour for a cistern serving a single urinal;

ii. 7.5 litres per hour per urinal bowl or stall, or, as the case may be, for each 700 mm width of urinal slab, for a cistern serving two or more urinals;

b) in the case of a manually or automatically operated pressure flushing valve used for flushing urinals which delivers not more than 1.5 litres per bowl or position each time the device is operated.

(5) Until 1st January 2001 paragraphs (1)(a) and (d) shall have effect as if they provided as follows-

a) "every water closet pan shall be supplied with water from a flushing cistern or trough of the valveless type which incorporates siphonic apparatus;"

b) "no flushing device installed for use with a WC pan shall give a single flush exceeding 7.5 litres;".

(6) Notwithstanding sub-paragraph 1(d), a flushing cistern installed before 1st July 1999 may be replaced by a cistern which delivers a similar volume and which may be either single flush or dual flush; but a single flush cistern may not be so replaced by a double flush cistern.

(7) In this paragraph-

"pressure flushing cistern" means a WC flushing device that utilises the pressure of water within the cistern supply pipe to compress air and increase the pressure of water available for flushing a WC pan;

"pressure flushing valve" means a self-closing valve supplied with water directly from a supply pipe or a distributing pipe which when activated will discharge a pre-determined flush volume;

"trap" means a pipe fitting, or part of a sanitary appliance, that retains liquid to prevent the passage of foul air; and

"warning pipe" means an overflow pipe whose outlet is located in a position where the discharge of water can be readily seen.

4. BRITISH STANDARDS OR WATER SPECIFICATION, DEEMED TO SATISFY WATER REGULATIONS

REQUIREMENTS

4.1 None.

5. GENERAL TOLERANCES AND MEASUREMENTS

In the absence of specific tolerances or accuracies the general tolerances and measurements set out in the WC Suite Performance Specifications shall apply.

6. TEST PROCEDURE

6.1 Tests are applicable to the following fittings:

WC FLUSHING CISTERNS, which require to be tested to the regulator's specification

(A) WC FLUSHING CISTERNS, WHICH REQUIRE TO BE TESTED TO THE REGULATORS SPECIFICATION

Apparatus

a) Cistern, complete with fitments including flushpipe and cover, installed in accordance with the manufacturer's instructions on a firm, flat, vertical surface.
b) calibrated measuring container
c) fluid level sensing devices
d) electronic timer
e) water supply controlled by a stopvalve
f) power supply

Procedure

Assemble the cistern with its fitments supplied by the manufacturer, as described in the manufacturer's instructions. Fasten the cistern by its normal fixing devices to a solid background.

For high level cisterns, connect a back wall flush pipe having a internal diameter equal to the diameter of the outlet discharge valve and overall length of the minimum supplied by the manufacturer, with an engagement length of 50 mm maximum.

For low level and close coupled cisterns connect a flush pipe into the outlet valve having an internal diameter equal to the diameter of the outlet discharge valve and overall length of the minimum supplied by the manufacturer, with an engagement length of 50 mm maximum.

Set the dual-flush controller or setting if provided to the full-flush volume in accordance with the manufacturer's instructions. Connect the water supply to the flushing cistern that is controlled by a stop valve and fitted, if necessary with a pressure regulating valve to give a static pressure of 3 ±0.5 bar at the inlet to the cistern float operated valve. Adjust the float operated valve so that the valve closes when the water level reaches the marked water line of the cistern operate the cistern at least once prior to carrying out the test. Fill the cistern to the marked water line, shut off the water supply, unless essential for the normal operation of the flushing device.

NOTE. Where a water supply is essential for the normal operation of the device, maintain the supply at a hydraulic pressure of 1.5 ±0.1 bar or the minimum required to operate the device, whichever is the greater.

Operate the flushing device completing one flushing cycle. On completion of the flush, using the calibrated measuring container or calibrated weigh scales or platform, add 0.5 litres of water to the cistern. Locate and position a fluid sensing device at the water level in the cistern. Using the calibrated measuring container add further water to the cistern equivalent to the volume of full flush less 1.0 litres. Locate and position a second fluid sensing device at the water level in the cistern. Add further water to the cistern up to the marked water level for the full flush volume. Connect the two fluid level sensing devices to the electronic timer and connect to the power supply. Operate the flushing device and on completion of the flush record the time taken to discharge the volume of water between the fluid level sensing devices as displayed on the timer. Repeat the procedure a further four times.

If the flushing device is provided with a reduced flush facility shut off the water and power supplies, and operate the flushing (full flush) mechanism. Using the calibrated container, add to the cistern a volume of water equivalent to the difference between the full flush volume and reduced flush volume as recorded. Add a further 0.5 litres. Locate and position a fluid level sensing device at the water level in the cistern. Using the calibrated measuring container or calibrated weigh scales or platform, add further water to the cistern until it is filled to a volume equivalent to the volume of full flush recorded less 1.0 litres. Locate and position a second fluid sensing device at this water level in the cistern. Add further water to the cistern, up to the marked water level for the full flush volume recorded. Turn on the power supply. Set the dual-flush controller or setting to the reduced-flush volume in accordance with the manufacturer's instructions. Operate the flushing device and on completion of the flush record the time taken to discharge the volume of water between the fluid level sensing devices as displayed on the timer. Repeat the procedure a further four times.

Expression of results

From the five recorded times, at each flush volume, determine the average time and, using the following formula, calculate the mean rate of discharge using the following methods.

For the full flush

$$\frac{Volume\ of\ discharge\ per\ full\ flush\ in\ litres - 1.0\ litres}{Average\ time\ in\ seconds}$$

For the reduced flush

$$\frac{Volume\ of\ discharge\ per\ reduced\ flush\ in\ litres - 1.5\ litres}{Average\ time\ in\ seconds}$$

7. ACCEPTANCE CRITERIA

When tested as described above, the mean flush rate of discharge per flush shall be ≥ 1.85 L/s for full flush and ≥ 1.6 L/s for reduced flush - if provided.

Test Code Sheet 1512.12 Wash of bowl

1. PURPOSE

Water Closet Suite: Wash of Bowl verification as described in WC Suite Performance Specifications.

2. TYPE OF TEST(S)-

Wash of bowl.

3. REGULATION REQUIREMENTS FOR FITTINGS.

Schedule 2

25. (1) Subject to the following provisions of this paragraph-

a. every water closet pan shall be supplied with water from a flushing cistern, pressure flushing cistern or pressure flushing valve, and shall be so made and installed that after normal use its contents can be cleared effectively by a single flush of water, or, where the installation is designed to receive flushes of different volumes, by the largest of those flushes;

b. no pressure flushing valve shall be installed-

i. in a house, or

ii. in any building not being a house where a minimum flow rate of 1.2 litres per second cannot be achieved at the appliance;

c. where a pressure flushing valve is connected to a supply pipe or distributing pipe, the flushing arrangement shall incorporate a backflow prevention device consisting of a permanently vented pipe interrupter located not less than 300mm above the spillover level of the WC pan or urinal:

d. no flushing device installed for use with a WC pan shall give a single flush exceeding 6 litres;

e. no flushing device designed to give flushes of different volumes shall have a lesser flush exceeding two-thirds of the largest flush volume;

f. every flushing cistern, other than a pressure flushing cistern, shall be clearly marked internally with an indelible line to show the intended volume of flush, together with an indication of that volume;

g. a flushing cistern designed to give flushes of different volumes-

i. shall have a readily discernible method of actuating the flush of different volumes; and

ii. shall have instructions, clearly and permanently marked on the cistern or displayed nearby, for operating it to obtain the different volumes of flush;

h. every flushing cistern, not being a pressure flushing cistern or a urinal cistern, shall be fitted with a warning pipe or with a no less effective device;

i. every urinal that is cleared by water after use shall be supplied with water from a flushing device which-

i. in the case of a flushing cistern, is filled at a rate suitable for the installation;

ii. in all cases, is designed or adapted to supply no more water than is necessary for effective flow over the internal surface of the urinal and for replacement of the fluid in the trap; and

j. except in the case of a urinal which is flushed manually, or which is flushed automatically by electronic means after use, every pipe which supplies water to a flushing cistern or trough used for flushing a urinal shall be fitted with an isolating valve controlled by a time switch and a lockable isolating valve, or with some other equally effective automatic device for regulating the periods during which the cistern may fill.

(2) Every water closet, and every flushing device designed for use with a water closet, shall comply with a specification approved by the regulator for the purposes of this Schedule.

(3) The requirements of sub-paragraphs (1) and (2) do not apply where faeces or urine are disposed of through an appliance that does not solely use fluid to remove the contents.

(4) The requirement in sub-paragraph (1)(i) shall be deemed to be satisfied-

a) in the case of an automatically operated flushing cistern servicing urinals which is filled with water at a rate not exceeding-

i. 10 litres per hour for a cistern serving a single urinal;

ii. 7.5 litres per hour per urinal bowl or stall, or, as the case may be, for each 700 mm width of urinal slab, for a cistern serving two or more urinals;

b) in the case of a manually or automatically operated pressure flushing valve used for flushing urinals which delivers not more than 1.5 litres per bowl or position each time the device is operated.

(5) Until 1st January 2001 paragraphs (1)(a) and (d) shall have effect as if they provided as follows-

a) "every water closet pan shall be supplied with water from a flushing cistern or trough of the valveless type which incorporates siphonic apparatus;"

b) "no flushing device installed for use with a WC pan shall give a single flush exceeding 7.5 litres;".

(6) Notwithstanding sub-paragraph 1(d), a flushing cistern installed before 1st July 1999 may be replaced by a cistern which delivers a similar volume and which may be either single flush or dual flush; but a single flush cistern may not be so replaced by a double flush cistern.

(7) In this paragraph-

"pressure flushing cistern" means a WC flushing device that utilises the pressure of water within the cistern supply pipe to compress air and increase the pressure of water available for flushing a WC pan;

"pressure flushing valve" means a self-closing valve supplied with water directly from a supply pipe or a distributing pipe which when activated will discharge a pre-determined flush volume;

"trap" means a pipe fitting, or part of a sanitary appliance, that retains liquid to prevent the passage of foul air; and

"warning pipe" means an overflow pipe whose outlet is located in a position where the discharge of water can be readily seen.

4. BRITISH STANDARD OR WATER SPECIFICATION DEEMED TO SATISFY WATER REGULATIONS REQUIREMENTS.

4.1 None.

5. GENERAL TOLERANCES AND MEASUREMENTS

In the absence of specific tolerances or accuracies the general tolerances and measurements set out in the WC Suite Performance Specifications shall apply.

6. TEST PROCEDURE.

Note: Unless stated otherwise the temperature of the test fluid shall be 20 ±10ºC.

6.1 Tests are applicable to the following fittings.

ALL WC CISTERNS AND PANS SUPPLIED AS SUITES, WHICH REQUIRE TO BE TESTED TO THE REGULATORS SPECIFICATION

(A) ALL WC CISTERNS AND PANS SUPPLIED AS SUITES, WHICH REQUIRE TO BE TESTED TO THE REGULATORS SPECIFICATION.

6.2 Apparatus

a) WC pan with associated flushing cistern and/or flushing device, or a close coupled/one-piece suite, all meeting the appropriate requirements of this standard, installed in accordance with the manufacturer's instructions on a firm, flat horizontal/vertical surface as appropriate. The flushing device shall satisfy the requirements of this specification.
b) supply of fine dry wooden sawdust;
c) 2 mm grade sieve;
d) water supply.

6.3 Procedure

Set the dual-flush controller or setting if provided to the full-flush volume in accordance with the manufacturer's instructions.

Fill any cistern to the marked water level. Shut off the water supply, unless essential for the normal operation of the flushing device.

NOTE: Where a water supply is essential for the normal operation of the device, maintain the supply at a hydraulic pressure of (1.5 ±0.1) bar or the minimum required to operate the device, whichever is the greater.

Moisten the complete inner surface of the WC pan to be tested. Immediately afterwards, sprinkle 20 g of sieved sawdust as completely and evenly as possible over the moistened surface. Operate the flushing device measure and record any area of unflushed surface.

Repeat the procedure a further four times.

NOTE: In the case of a bowl with a rim, the surface to be tested is below the flushing rim and above the water in the trap. In the case of a rimless bowl, the surface to be tested is the area between a horizontal line 85 mm below the top edge of the WC pan and above the water in the trap.

6.4 Expression of results

On completion of the five test procedures calculate the arithmetic average of the unflushed area between the water level in the trap and the underside of the rim. Record compliance, or any failure to comply with the acceptance criteria.

7. ACCEPTANCE CRITERIA

When tested as described above, the arithmetic average of any unflushed area below the rim and above the surface of the trap shall be no greater than 50 cm^2 after the five flushing operations.

Test Code Sheet 1611.16 Liquid contaminant, dye retention

1. PURPOSE

Water Closet Suite: Liquid contaminant dye retention verification as described in WC Suite Performance Specifications.

2. TYPE OF TEST(S)

Liquid contaminant, dye retention.

3. REGULATION REQUIREMENTS FOR FITTINGS.

Schedule 2

25. (1) Subject to the following provisions of this paragraph-

a. every water closet pan shall be supplied with water from a flushing cistern, pressure flushing cistern or pressure flushing valve, and shall be so made and installed that after normal use its contents can be cleared effectively by a single flush of water, or, where the installation is designed to receive flushes of different volumes, by the largest of those flushes;

b. no pressure flushing valve shall be installed-

(i) in a house, or

(ii) in any building not being a house where a minimum flow rate of 1.2 litres per second cannot be achieved at the appliance;

c. where a pressure flushing valve is connected to a supply pipe or distributing pipe, the flushing arrangement shall incorporate a backflow prevention device consisting of a permanently vented pipe interrupter located not less than 300mm above the spillover level of the WC pan or urinal:

d. no flushing device installed for use with a WC pan shall give a single flush exceeding 6 litres;

e. no flushing device designed to give flushes of different volumes shall have a lesser flush exceeding two-thirds of the largest flush volume;

f. every flushing cistern, other than a pressure flushing cistern, shall be clearly marked internally with an indelible line to show the intended volume of flush, together with an indication of that volume;

g. a flushing cistern designed to give flushes of different volumes-

(i) shall have a readily discernible method of actuating the flush of different volumes; and

(ii) shall have instructions, clearly and permanently marked on the cistern or displayed nearby, for operating it to obtain the different volumes of flush;

h. every flushing cistern, not being a pressure flushing cistern or a urinal cistern, shall be fitted with a warning pipe or with a no less effective device;

i. every urinal that is cleared by water after use shall be supplied with water from a flushing device which-

(i) in the case of a flushing cistern, is filled at a rate suitable for the installation;

(ii) in all cases, is designed or adapted to supply no more water than is necessary for effective flow over the internal surface of the urinal and for replacement of the fluid in the trap; and

j. except in the case of a urinal which is flushed manually, or which is flushed automatically by electronic means after use, every pipe which supplies water to a flushing cistern or trough used for flushing a urinal shall be fitted with an isolating valve controlled by a time switch and a lockable isolating valve, or with some other equally effective automatic device for regulating the periods during which the cistern may fill.

(2) Every water closet, and every flushing device designed for use with a water closet, shall comply with a specification approved by the regulator for the purposes of this Schedule.

(3) The requirements of sub-paragraphs (1) and (2) do not apply where faeces or urine are disposed of through an appliance that does not solely use fluid to remove the contents.

(4) The requirement in sub-paragraph (1)(i) shall be deemed to be satisfied-

a. in the case of an automatically operated flushing cistern servicing urinals which is filled with water at a rate not exceeding-

(i) 10 litres per hour for a cistern serving a single urinal;

(ii) 7.5 litres per hour per urinal bowl or stall, or, as the case may be, for each 700 mm width of urinal slab, for a cistern serving two or more urinals;

b. in the case of a manually or automatically operated pressure flushing valve used for flushing urinals which delivers not more than 1.5 litres per bowl or position each time the device is operated.

(5) Until 1st January 2001 paragraphs (1)(a) and (d) shall have effect as if they provided as follows-

a. "every water closet pan shall be supplied with water from a flushing cistern or trough of the valveless type which incorporates siphonic apparatus;"

b. "no flushing device installed for use with a WC pan shall give a single flush exceeding 7.5 litres;".

(6) Notwithstanding sub-paragraph 1(d), a flushing cistern installed before 1st July 1999 may be replaced by a cistern which delivers a similar volume and which may be either single flush or dual flush; but a single flush cistern may not be so replaced by a double flush cistern.

(7) In this paragraph-

"pressure flushing cistern" means a WC flushing device that utilises the pressure of water within the cistern supply pipe to compress air and increase the pressure of water available for flushing a WC pan;

"pressure flushing valve" means a self-closing valve supplied with water directly from a supply pipe or a distributing pipe which when activated will discharge a pre-determined flush volume;

"trap" means a pipe fitting, or part of a sanitary appliance, that retains liquid to prevent the passage of foul air; and

"warning pipe" means an overflow pipe whose outlet is located in a position where the discharge of water can be readily seen.

4. BRITISH STANDARD OR WATER SPECIFICATION DEEMED TO SATISFY WATER REGULATIONS REQUIREMENTS.

4.1 None.

5. GENERAL TOLERANCES AND MEASUREMENTS

In the absence of specific tolerances or accuracies the general tolerances and measurements set out in the WC Suite Performance Specifications shall apply.

6. TEST PROCEDURE

Note: Unless stated otherwise the temperature of the test fluid shall be 20 ±10ºC.

6.1 Tests are applicable to the following fittings:

ALL WC CISTERNS AND PANS SUPPLIED AS SUITES, which require to be tested to the regulators specification.

(A) ALL WC CISTERNS AND PANS SUPPLIED AS SUITES, WHICH REQUIRE TO BE TESTED TO THE REGULATORS SPECIFICATION.

6.2 Apparatus

a) WC pan with associated flushing cistern and/or flushing device, or a close coupled/one-piece suite, all meeting the appropriate requirements of this standard, installed in accordance with the manufacturer's instructions on a firm, flat horizontal/vertical surface as appropriate. The flushing device and cistern shall satisfy the requirements of this specification.
b) liquid contaminant dye (5 g of potassium permanganate per litre of water);

   WARNING: Potassium permanganate is an oxidant and appropriate precautions should be taken when preparing the solution.

c) calibrated spectrophotometer or opacity meter with cuvette:
d) fluid suction device;
e) water supply.

6.3 Procedure

Set the dual-flush controller or setting - if provided - to the full-flush volume in accordance with the manufacturer's instructions. Fill any cistern to the marked water level. Shut off the water supply, unless essential for the normal operation of the flushing device.

Note. Where a water supply is essential for the normal operation of the device, maintain the supply at a hydraulic pressure of (1.5 ±0.1) bar or the minimum required to operate the device, whichever is the greater.

Using the fluid suction device, remove any water from the WC's trap. Measure the opacity through the 5 g of potassium permanganate per litre of water dye solution (Stock solution). Record the result. Fill the WC's trap with liquid contaminant dye to the trap seal depth. Operate the flushing device. On completion of the flush, stir the remaining liquid to a uniform concentration. In a time ≤10 seconds after stirring has stopped, draw and place a sample of the liquid remaining in the trap in the cuvette. Measure and record the concentration of potassium permanganate in the sample. Calculate its percentage dilution against the stock solution Repeat the procedure a further 4 (9) times as appropriate (see acceptance criteria).

Reset the dual-flush control or setting - if provided - to reduced-flush volume and repeat the above procedure 5 (10) times as appropriate at the reduced flush volume.

6.4 Expression of results

Record compliance, or failure to comply with the requirements of the acceptance criteria.

7. ACCEPTANCE CRITERIA

When tested as described above, for the first five flush cycles, or for a minimum of nine out of ten flush cycles at full flush volume, the contaminate level shall be ≤1 %. For the first five flush cycles, or for a minimum of nine out of ten flush cycles at reduced flush volume when provided, the contaminate level shall be ≤6 %.

Test Code Sheet 2212.3 Type AG – Vacuum / Dimensional

1. PURPOSE

Type AG air gap arrangement verification as described in the Specification for the Prevention of Backflow.

2. TYPE OF TEST(S)

Vacuum / Dimensional

3. WATER REGULATIONS REQUIREMENTS FOR FITTINGS

Schedule 2

15-(1) …. every water system shall contain an adequate device or devices for preventing backflow of fluid from any appliance, fitting or process from occurring.

4. BRITISH STANDARDS OR WATER SPECIFICATION, DEEMED TO SATISFY WATER REGULATIONS

REQUIREMENTS

4.1 None.

5. GENERAL TOLERANCES AND MEASUREMENTS

In the absence of specific tolerances or accuracies the following shall apply.

1. Dimension: up to and including 75 mm ±5%; over 75 mm ±2%.
2. Flow rate and pressure: ±5 % of the value specified.
3. Temperature: cold water ±10 °C of the value specified.
4. Linear measuring instruments shall have a minimum resolution of 0.5 mm.
5. Timing instruments shall have a minimum resolution of 0.1 seconds.
6. All the measuring instruments shall have an error limit of ±2 % of the measured value.

6. TEST PROCEDURE

Note 1: Unless otherwise stated the temperature of the test fluid shall be 20 ±10°C

6.1 Tests applicable to the following:-

(A) TYPE AG AIR GAPS

TEST METHOD

i. SCOPE

This procedure specifies the characteristics of type AG air gaps, verified by measurement or by vacuum test. Air gaps that comply with the requirements of this procedure are devices for protection of potable water installations from pollution. In addition to factory assembled products this procedure includes requirements for site constructed air gaps.

This is a performance standard for 'AG' air gaps. Materials of construction must be fit for the purpose and application to ensure compliance with this procedure during normal working use.

ii. DEFINITIONS

For the purpose of this procedure the following definitions apply.

ii.i Air Gap(s) Family A Type G

The AG device is an air gap placed permanently and vertically between the lowest point of the feed orifice and the critical water level.

The overflow shall be capable of draining the maximum inflow of water in a positive pressure fault condition.

ii.ii Spillover Level

The level at which water will start to overflow the receiving vessel, with all outlets closed.

ii.iii Maximum Level

The highest water level reached above the spillover level under positive fault conditions, with all outlets closed.

ii.iv Critical Water Level

The level (h) above the spill over level two seconds after the maximum water flow has ceased. (The height between the spillover level and the critical level is dimension ‘h’).

ii.v Internal Diameter 'D' of Feed Pipe (Bore)

Diameter 'D' (mm) is the maximum internal diameter found within the last metre of the supply pipe or the DN of the inlet connection.

ii.vi Graphic Symbol

iii. DESIGNATION

The air gap is designated by:

- the reference to this standard.
- its Family, its Type.
- the DN of the feed pipe to the assembly.

iv. MATERIALS

iv.i Materials choice

The manufacturer shall state the type of materials chosen in his technical and commercial documents.

The surface condition of materials in contact with water shall be chosen to be the least inclined to scale.

The materials used upstream, and including the atmospheric outlet opening, must comply with BS 6920 or other national standard which provides an equivalent level of protection or performance.

The choice of other material is discretionary but shall be suitable for the intended use of the appliance (temperature, corrosion, scale, etc).

There are no special requirements concerning the materials downstream of the atmospheric outlet opening provided they do not have any harmful effect on the upstream part.

v. DESIGN

v.i General

The protection assembly comprises four parts integral with one another:

- a water inlet device.
- a receiving vessel.
- an overflow.
- air break to drain.

v.ii Water Inlet Device

v.ii.i Every float-operated valve or other device which controls the inflow of water to a receiving vessel shall be securely and rigidly fixed to that vessel.

v.ii.ii Every feed ;pipe supplying water to such a valve assembly or other device shall be fixed in its position to prevent it from moving or buckling, (i.e. bending or deformation of the assembly).

v.ii.iii Submerged supply pipes to the inlet device that have joints which are adjustable or can be dismantled, are not permitted below the critical water level (h).

v.ii.iv The discharge outlet of the inlet device shall not come into contact in any way with a product from downstream at the maximum water level.

v.iii Overflow Arrangements

v.iii.i The overflow shall be capable of draining off the maximum inlet flow.

v.iii.ii Shall not be less than 19mm internal diameter.

v.iii.iii Overflow arrangements must include an air break prior to a connection to drain. An air break to drain must conform to Test Code Sheet 2212.10 or BS EN 1717 requirements.

NOTE 2: The length of the overflow before the air break to drain must not be of such a length that it will cause air gap ‘AG’ to be violated. All air gaps to drain arrangements shall be visible.

NOTE 3: Clauses A5.1 v.iii.ii and A5.1 v.iii.iii do not apply to a WC suite where the overflow discharges internal to the WC bowl providing the overflow is not less than 19 mm internal diameter at the point water enters the overflow to be discharged; and the critical water level (h) has been verified by test.

7. ACCEPTANCE CRITERIA

7.1 Air Gap Distance

For air gaps 'AG' the critical water level shall be established and the air gap distance measured from the lowest point of the water inlet to the critical water level (see informative Annex B) or by vacuum test (see Annex A).

Air gaps 'AG' must be greater than 2D and never less than 20mm or must meet the requirements of the vacuum test specified in Annex A.

7.2 Test Procedure

The overflow

(a) The overflow shall be verified by a 2mm deep 19mm diameter plug or no less effective method.

The air gap ‘AG’ is determined by either:-

(b) Measurement by test - ‘h’ is determined by measurement of the depth of water above the spillover level of the overflow two seconds after the inflows equal to Q = $0.14D^2$ in litres per minute has stopped, or a dynamic pressure of 10 bar has stopped if the flow rate Q cannot be achieved, where ‘D’ is the bore inlet (see ii.v) and with all outlets closed, based on a velocity of 3 m/s.

NOTE 4: The receiving vessel must be fitted with a warning / overflow pipe.

NOTE 5: There is no relationship between the maximum fault level and the top most level of the warning overflow pipe.

(c) Vacuum Test

The body of the inlet valve must satisfy the vacuum test specification in Annex A.

Air Gap – Vacuum test

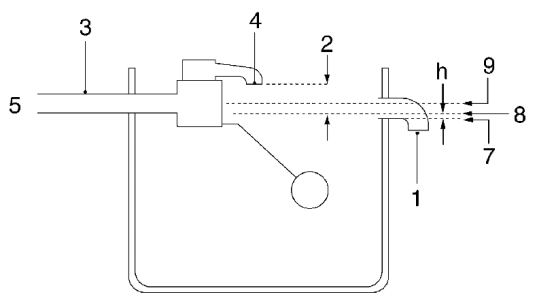

1 = Warning/Overflow Pipe
2 = Air Gap (AG)
3 = Feed Pipe
4 = Feed Orifice
5 = Internal Diameter of Feed Pipe (Bore)
7 = Spill-over Level
8 = Critical Water Level (h)
9 = Maximum Water Level

ANNEX A

TITLE: WORKING PAPER FOR METHOD OF VACUUM TEST

1. SCOPE

This annex describes the apparatus and a method for applying a vacuum test to backflow prevention devices and water using appliances to determine that they have an acceptable degree of protection against backflow or backsiphonage.

2. DEFINITIONS

2.1 Critical level: The highest level of the fluid reached in any part of the appliance 2 seconds after closing water inlet starting from maximum fluid level.

In a pressurised system this is the maximum manometric height allowed.

3. APPARATUS

3.1 General

The test apparatus shall be arranged and constructed so that the absolute pressure measured near the appliance under test on its supply side remains less than 50 KPa (-50 KPa gauge pressure) for at least 5 seconds.

3.2 Vacuum vessel and connecting pipework, of sufficient strength to support a total vacuum. The vacuum vessel shall be provided with a drain cock to remove any water drawn into the vessel during the test.

NOTE 6: Recommended capacities of the vacuum vessel are given in Table 1.

3.3 Vacuum device, capable of reducing the absolute pressure within the vacuum vessel to 20 KPa (-80 KPa gauge pressure).

3.4 Pipes and fittings, of nominal size not less than that of the appliance under test.

Any valve or fitting installed in the test pipe shall be a full-way valve offering an unimpeded flow path.

Connections to the vacuum vessel shall not unduly impede the fluid flow and shall have a low loss profile when very low resistance appliances are tested.

3.5 Vacuum gauges. from 100 KPa absolute to 10 KPa absolute, with an accuracy of 2 % of the reading. The system connection shall be made in such a way that it does not disturb the flow in the pipework.

3.6 Water trap, provided with a cock to allow the trapped water to be drained. The trap shall not so restrict the flow that the requirement of 4.1 cannot be met.

4. PROCEDURE

4.1 Remove or render inoperative any upstream backflow prevention device.

4.2 Connect the water inlet connection of the appliance under test to the test pipe.

4.3 Maintain the critical water level as established in 7.2 (a). The critical level shall be maintained during the test by supply from a separate source. This supply shall be submerged to prevent disturbance of the water surface.

4.4 Close the full-way valve and the water trap drain valve.

4.5 Evacuate the vacuum vessel to an absolute pressure of 20 KPa (-80 KPa gauge pressure) as indicated by vacuum gauge A.

4.6 Open the full-way valve within a period of 2 s.

4.7 Read the vacuum gauge B. Check that the absolute pressure does not exceed 50 KPa (-50 KPa gauge pressure) for a period of at least 5 s after the full way valve is fully open.

4.8 Observe the water trap.

NOTE 7: If the receiving vessel can be subject to positive pressure backflow, it is important that the inlet orifice is positioned so that it cannot be contaminated by the ascending / returning fluid.

Figure 1: Arrangement of apparatus for vacuum test

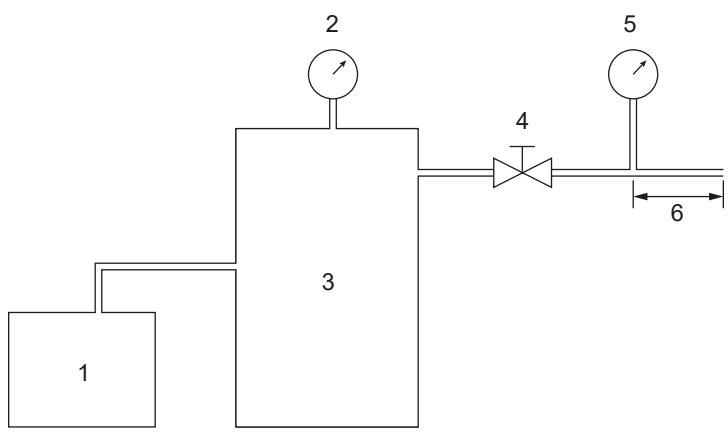

Drawing is diagrammatic only

KEY.

1 Vacuum pump
2 Vacuum gauge A
3 Vacuum vessel
4 Full-way valve
5 Vacuum gauge B
6 5 DN to 10 DN

5. ACCEPTANCE CRITERIA

No water shall be collected in the water trap.

Table 1 : Recommended vacuum vessel capacities

Nominal size of appliance inlet connection (mm)		Recommended minimum capacity of vacuum vessel (m3)
≤ 22		0.25
> 22 <	≤ 54	0.75
> 54 <	≤ 76.1	2
> 76.1	≤ 108	4
> 108	≤ 159	7
NOTE 8: Actual vacuum vessel capacity is also dependent upon the backflow prevention device being tested.		

Test Code Sheet 2213.15 Type AC – Dimensional

1. PURPOSE

Type AC air gap arrangement verification as described in the Specification for the Prevention of Backflow.

2. TYPE OF TEST(S)

Dimensional

3. WATER REGULATIONS REQUIREMENTS FOR FITTINGS

Schedule 2

15-(1) …every water system shall contain an adequate device or devices for preventing backflow of fluid from any appliance, fitting or process from occurring.

4. BRITISH STANDARDS OR WATER SPECIFICATION, DEEMED TO SATISFY WATER REGULATIONS REQUIREMENTS

4.1 None.

5. GENERAL TOLERANCES AND MEASUREMENTS

In the absence of specific tolerances or accuracies the following shall apply.

1. Dimension: up to and including 75 mm ±5%; over 75 mm ±2%.
2. Flow rate and pressure: ±5 % of the value specified.
3. Temperature: cold water ±10 °C of the value specified.
4. Linear measuring instruments shall have a minimum resolution of 0.5 mm.
5. Timing instruments shall have a minimum resolution of 0.1 seconds.
6. All the measuring instruments shall have an error limit of ±2 % of the measured value.

6. TEST PROCEDURE

6.1 Tests applicable to the following:-

TYPE AC AIR GAP WITH SINGLE SUBMERGED FEED (INCORPORATING AIR INLET AND OVERFLOW)

up to and including DN 250

Devices for the prevention of contamination by backflow.

(A) TYPE AC AIR GAP WITH SINGLE SUBMERGED FEED (INCORPORATING AIR INLET AND OVERFLOW)

TEST METHOD

i. SCOPE

This procedure specifies the characteristics of type AC air gaps with submerged feed incorporating air inlet and an overflow from a container for inlet or feed pipes of nominal size up to and including DN 250. Air gaps that comply with the requirements of this procedure are devices for protection of potable water installations from pollution fluid risk 3. In addition to factory assembled products this procedure includes requirements for site constructed air gaps.

The products specified are for single feed only and suitable for water temperatures up to and including 65°C and occasional temperatures up to and including 95°C. However in some instances the maximum operating temperature may be limited to 40°C and should be marked accordingly.

ii. DEFINITIONS

For the purpose of this procedure the following definitions apply.

ii.i Air Gap family ‘A’ type AC - Air gap with single submerged feed (incorporating air inlet and overflow)

A non-mechanical form of backflow prevention air gap suitable for fluids only, no solids or sludges, placed permanently and vertically between the lowest point of the air inlet orifice in the feed pipe and critical water level at which the container overflows.

ii.ii Spill-over Level

The point at which the water first starts to overflow into the overflow pipe (invert).

ii.iii Critical Water Level

The level (h) above the spill-over level two seconds after the inlet water has ceased to flow.

ii.iv Graphic symbol

Figure 1 Type AC graphic symbol

iii. DESIGNATION

The air gap family 'A' type AC is designated by the following:

- the reference to this standard.
- its Family, its Type.
- the DN of the feed pipe.
- example of the designation:
- air gap Family A Type AC DN15 TSN AC-01.

iv. MATERIALS

iv.i Materials choice

The manufacturer shall state the type of materials chosen in his technical and commercial documents.

The surface condition of materials in contact with water shall be chosen to be the least inclined to scale.

The materials used upstream, and including the atmospheric outlet opening (i.e. the air port inlet), must comply with BS 6920 or other national standard which provides an equivalent level of protection or performance.

The choice of other material is discretionary but shall be suitable for the intended use of the appliance (temperature, corrosion, scale, etc).

There are no special requirements concerning the materials used downstream of the atmospheric outlet opening provided they do not have any harmful effect on the upstream part.

v. DESIGN

v.i General

The protection assembly comprises three parts integral with one another:

- a water inlet device.
- a receiving vessel (container) with overflow.
- a permanently open air port inlet.

The air port inlet shall be above the invert of the overflow.

The smallest dimension of the air inlet port shall not be less than 4 mm and capable of accepting a pin gauge of 4 mm $^{+0.1}_{-0}$ or a no less effective method.

v.ii Water Inlet Device

v.ii.i Every float-operated valve or other device which controls the inflow of water to a storage cistern shall be securely and rigidly fixed to that cistern.

v.ii.ii Every feed pipe supplying water to such a valve or other device shall be fixed in its position to prevent it from moving or buckling.

v.ii.iii No mechanical joint (see Notes 1 and 2) within the cistern on submerged supply pipes or inlet devices are permitted at or below the critical water level (h).

NOTE 1: Mechanical joints are joints which when undone open a direct pathway between the wholesome water (incoming supply) and the water stored within the flushing cistern. These include joints that are ‘adjustable’ or can be ‘dismantled’; rely on elastomeric, or other material, to provide a water-tight seal; or where the coupling of two components being dependent upon mechanically applied forces, with or without the use of secondary seal.

NOTE 2: For the purposes of this specification the following are not considered *mechanical joints*. Nuts or jointing mechanism on the diaphragm housing assembly of the inlet device. Joints where the joining surface are permanently fused together e.g. by a chemical process or the application of heat.

v.iii Overflow Arrangements

v.iii.i The overflow shall be capable of draining off the maximum inlet flow.

v.iii.ii Shall not be less than 19 mm internal diameter.

v.iii.iii Overflow arrangements must include an air break prior to a connection to drain. An air break to drain must conform to Test Code Sheet 2212.10 or BS EN 1717.

NOTE 3: The length of the overflow before the air break to drain must not be of such a length that it will cause air gap 'AC' to be violated. All air gaps to drain arrangements shall be visible.

NOTE 4: Clauses v.iii.ii and v.iii.iii do not apply to a WC suite where the overflow discharges internal to the WC bowl providing the overflow is not less than 19 mm internal diameter at the point water enters the overflow to be discharged; and the critical water level (h) has been verified by test.

7. ACCEPTANCE CRITERIA

7.1 DISTANCE OF AIR GAP (SEE FIGURE 2)

The clearance 'A' measured between the lowest external point of the permanently open air port inlet and the critical water level shall be at least equal to twice the internal diameter of the inlet pipe and never less than 20 mm.

7.1.1 Establishing critical water level 'h'

Dimension 'h' is determined by measurement of the depth of water above the spillover level of the overflow two seconds after the inflows equal to $Q = 0.14D^2$ in litres per minute has stopped, or a dynamic pressure of 10 bar has stopped if the flow rate Q cannot be achieved, where 'D' is the bore inlet and with all outlets closed, based on a velocity of 3 m/s.

Note 5: Diameter 'D' (mm) is the maximum internal diameter found within the last metre of the supply pipe or the DN of the inlet connection.

7.1.2 Acceptance criteria

$A \geq 2D$ but not less than 20 mm.

7.2 OVERFLOW

7.2.1 General

The overflow shall be so designed as to be capable of providing an appropriate air gap between the lowest point of the air port inlet and the critical water level, from a maximum water level caused by an inflow.

Figure 2 Air gap vacuum test

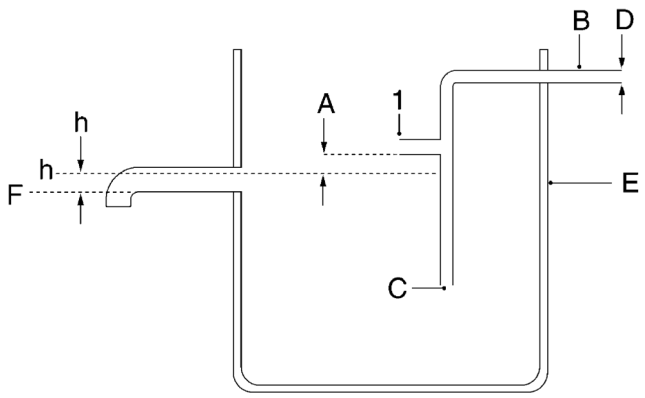

Legend:

A = Air Gap
B = Feed Pipe
C = Feed Orifice
D = Internal Diameter of Feed Pipe
E = Receiving Vessel
F = Spill-over Level
h = Critical Water Level (h)
1 = Air Inlet

7.2.2 Acceptance criteria

The overflow is not less than 19 mm internal diameter.

For internally discharging WC suite overflows (see Note 4) using a 2 mm deep 19 mm diameter plug, or a no less effective method, the overflow is not less than 19 mm at the point where water enters the overflow.

7.3 EFFICIENCY OF AIR PORT INLET

7.3.1 Verify the air port is capable of accepting a pin gauge of 4 mm $^{+0.1}_{-0}$, or a no less effective method, through its whole length.

7.3.2 Remove or render inoperative any additional backflow prevention devices upstream or within the arrangement.

Foul the inlet valve seat/diaphragm with a 0.75 mm nominal diameter wire, or otherwise no less effective method, which ensures the waterway through the seat remains open throughout the test.

Apply the vacuum test (see Annex A).

7.3.3 Where documented tests have been performed and meet the acceptance criteria of TCS 2212.20, or an identical test (e.g. BS 1212-3:1990), the vacuum test in 7.3.2 is deemed to have been satisfied.

7.3.4 Acceptance criteria

The air port is ≥ 4 mm; and

There is no visible evidence of backflow of water.

ANNEX A (INFORMATIVE)

Vacuum test

A.1 APPARATUS

A.1.1 General

The test apparatus shall be arranged and constructed (see Figure A1) so that the absolute pressure measured near the device under test on its supply side remains less than 50 kPa (-50 kPa gauge pressure) for at least 5 s.

NOTE A1: These conditions indicate the existence of choking air flow. Details of the components are given in A1.3 to A1.5

A.1.2 Vacuum vessel and connecting pipework, of sufficient strength to support a total vacuum safely. The vacuum vessel shall be provided with a drain cock to remove any water drawn into the vessel during the test.

NOTE A2: Recommended capacities of the vacuum vessel are given in Table A1.

A.1.3 Vacuum device, capable of reducing the absolute pressure within the vacuum vessel to 20 kPa (-80 kPa gauge pressure).

A.1.4 Pipes and fittings, of nominal size not less than the bore of the orifice at the lowest part of the inlet or feed part of the device under test. If the air gap is not visible, the connecting pipework shall be of transparent material.

Any valve fitted in the test pipe shall be a full-way valve offering an unimpeded flow path.

The pipe length between the vacuum gauge to the device on test shall have a length of 5 DN to 10 DN.

Connections to the vacuum vessel shall not unduly impede the fluid flow and shall have a low loss profile.

A.1.5 Vacuum gauges, shall have an appropriate range i.e. 100 kPa to 0 kPa and an accuracy of 1 % test pressure. The gauge connection shall be made in such a way that it does not disturb the flow in the pipework.

A.2 PROCEDURE

A.2.1 Connect the fitting to be tested to the test apparatus.

A.2.2 With all valves upstream of the air gap including the test valve fully open, establish and maintain the critical water level. The critical level shall be maintained during the test by supply from a separate source at the same flow rate as the maximum specified by the manufacturer. The discharge shall be submerged to prevent disturbance of the water surface.

A.2.3 Close the full-way valve.

A.2.4 Evacuate the vacuum vessel to an absolute pressure of 20 kPa (-80 kPa gauge pressure as indicated by vacuum gauge A (see Figure A1).

A.2.5 Open the full-way valve within a period of 2 s.

A.2.6 Read the vacuum gauge B. Check that the absolute pressure does not exceed 50 kPa (-50 kPa gauge pressure) for a period of at least 5 s after the full way valve is fully open.

A.2.7 If the absolute pressure does not remain below 50 kPa (-50 kPa gauge pressure) for at least 5 s reduce the flow resistance of the connecting pipework by increasing the bore of the pipe between the vacuum gauge B and the vacuum vessel and/or by reducing its length.

A.2.8 Observe the air gap if visible, or a transparent tube for evidence of backflow of water.

A3 OPERATING CRITERIA

A.3.1 If the conditions of choking flow are met (see A.1.1) the test is deemed to be valid.

Table A1 : Recommended vacuum vessel capacities

Bore of orifice at lowest part of inlet or feedpipe (mm)	Recommended minimum capacity of vacuum vessel (m3)
<22	1.5
>22 <54	4
>54 <76.1	10
>76.1 <108	20
>108 <159	35

Figure A1: Arrangement of apparatus for vacuum test

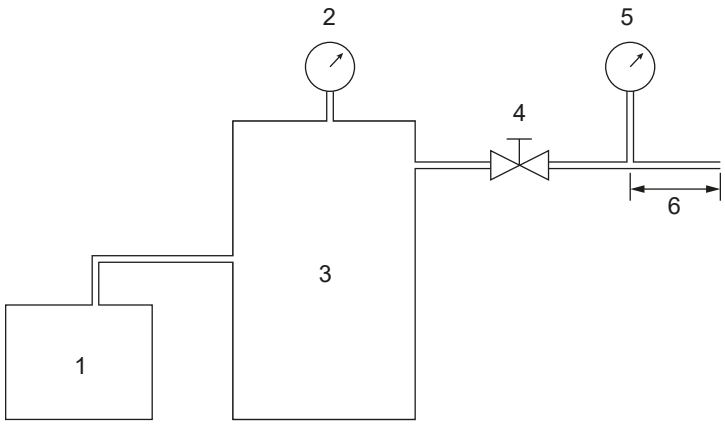

Drawing is diagrammatic only

Key.

1 Vacuum pump
2 Vacuum gauge A
3 Vacuum vessel
4 Full-way valve
5 Vacuum gauge B
6 Length 5 DN to 10 DN

Test Code Sheet 2213.20 Type AUK4

1. PURPOSE

Type AUK4 air gap arrangement verification as described in the Specification for the Prevention of Backflow.

2. TYPE OF TEST(S)

Dimensional and internal overflow compatibility

3. WATER REGULATIONS REQUIREMENTS FOR FITTINGS

Schedule 2

15 (1) …every water system shall contain an adequate device or devices for preventing backflow of fluid from any appliance, fitting or process from occurring.

4. BRITISH STANDARDS OR WATER SPECIFICATION, DEEMED TO SATISFY WATER REGULATIONS

REQUIREMENTS

4.1 None

5. GENERAL TOLERANCES AND MEASUREMENTS

In the absence of specific tolerances or accuracies the following shall apply.

1. Dimension: up to and including 75 mm ±5%; over 75 mm ±2%.
2. Flow rate and pressure: ±5 % of the value specified.
3. Temperature: cold water ±10 °C of the value specified.
4. Linear measuring instruments shall have a minimum resolution of 0.5 mm.
5. Timing instruments shall have a minimum resolution of 0.1 seconds.
6. All the measuring instruments shall have an error limit of ±2 % of the measured value.

6. TEST PROCEDURE

6.1 Tests applicable to the following:-

TYPE AUK4 AIR GAP DEVICE WITH INTERPOSED FLUSHING CISTERN

Devices for the prevention of contamination by backflow. This arrangement may only be used with a flushing cistern and appropriate receiving vessel.

(A) TYPE AUK4 - AIR GAP DEVICE WITH INTERPOSED FLUSHING CISTERN

TEST METHOD

A1 Scope

Procedure A specifies the characteristics of Type AUK4 air gaps. Air gaps that comply with the requirements of this procedure are devices for protection of wholesome water installations from contamination within a flushing cistern for example as part of a WC suite or urinal.

This is the performance criteria for Type AUK4 air gaps. Materials of construction must be fit for the purpose and application to ensure compliance with this procedure during normal working use.

A2 Definitions

Definitions as referenced in the Water Supply (Water Fittings) Regulations 1999 and Specification on the Prevention of Backflow.

i. Type AUK4 air gap with interposed flushing cistern

Type AUK4 air gap with interposed flushing cistern is a non-mechanical backflow prevention arrangement consisting of a flushing cistern feeding by gravity a receiving vessel (e.g. WC pan). The interposed flushing cistern incorporates a Type AG or Type AC air gap and an overflow. The spill-over level of the receiving vessel (e.g. WC pan) being located not less than 150 millimetres below the overflow pipe (or combined warning/overflow pipe), and not less than 15 millimetres below the internal spillover level with all devices (e.g. flushing valve and associated attachments) completely removed (see Figure 2).

ii. Flushing cistern

Means a cistern provided with valve or device for controlling the discharge of the stored water into a water closet pan or urinal;

iii. Flushing device

Device fitted to a flushing cistern to provide controlled measured volume(s) of water to a receiving vessel for flushing.

NOTE 1: A flushing device can be a siphon, drop valve, flap valve or pressurised cistern etc. The flushing device includes the activator (i.e. handle, button, linkages, etc.) and all seals, pistons, or other integral components.

iv. Spillover level

Means the level at which the fluid in a receptacle will first spill over the top edge of a receptacle if the inflow of water exceeds the outflow through any outlet and any overflow pipe.

v. Graphic symbol

A3 Designation

The air gap is designated by:

- its Type
- the DN of the feed pipe to the assembly

A4 Materials

The manufacturer shall state the type of materials chosen in his technical and commercial documents.

The surface condition of materials in contact with water shall be chosen to be the least inclined to scale.

The materials used upstream, and including the atmospheric outlet opening (e.g. for Type AC air gap the air port inlet), must comply with BS 6920 or other national standard which provides an equivalent level of protection or performance.

The choice of other material is discretionary but shall be suitable for the intended use of the appliance (temperature, corrosion, scale, etc).

There are no special requirements concerning the materials used downstream of the atmospheric outlet opening provided they do not have any harmful effect on the upstream part.

A5 Design

i. General

The protection assembly comprises of the following parts:

a) A single water inlet device

b) Flushing device

c) An overflow/warning pipe

d) Flushing cistern

e) Receiving vessel

ii. Water inlet device

Every float-operated valve or other device which controls the inflow of water to a flushing cistern shall be securely and rigidly fixed to that cistern.

Every feed pipe supplying water to such a valve or other device shall be fixed in its position to prevent it from moving or buckling.

Submerged supply pipes or inlet devices within the flushing cistern shall not have a mechanical joint (see Note 2) at or below the critical water level (h).

NOTE 2: Mechanical joints are joints which when undone open a direct pathway between the wholesome water (incoming supply) and the water stored within the flushing cistern. These include joints that:

a) are ‘adjustable’ or can be ‘dismantled’; or

b) rely on elastomeric, or other material, to provide a water-tight seal; or

c) where the coupling of two components being dependent upon mechanically applied forces, with or without the use of secondary seal.

Joints not considered mechanical joints include:

a) Nuts or jointing mechanism on the diaphragm housing assembly.

b) Joints where the joining surface are permanently fused together, for example by a chemical process or the application of heat.

iii. Air gap

The air gap shall conform to either a Type AC air gap (Test Code Sheet 2213.15) or a Type AG air gap (Test Code Sheet 2212.3).

iv. Warning pipe and overflow arrangements

a) The overflow shall be capable of draining off the maximum inlet flow.

b) Shall not be less than 19mm internal diameter.

c) Overflow arrangements must include an air break prior to a connection to drain. An air break to drain must conform to Test Code Sheet 2212.10 or BS EN 1717.

NOTE 3: Clauses A5 iv b) and A5 iv c) do not apply to a WC suite, or urinal, where the overflow discharges internal to the bowl providing the overflow is not less than 19 mm internal diameter at the point water enters the overflow to be discharged; and the critical water level (h) has been verified by test.

Figure 1 Type AUK4 air gap with interposed flushing cistern

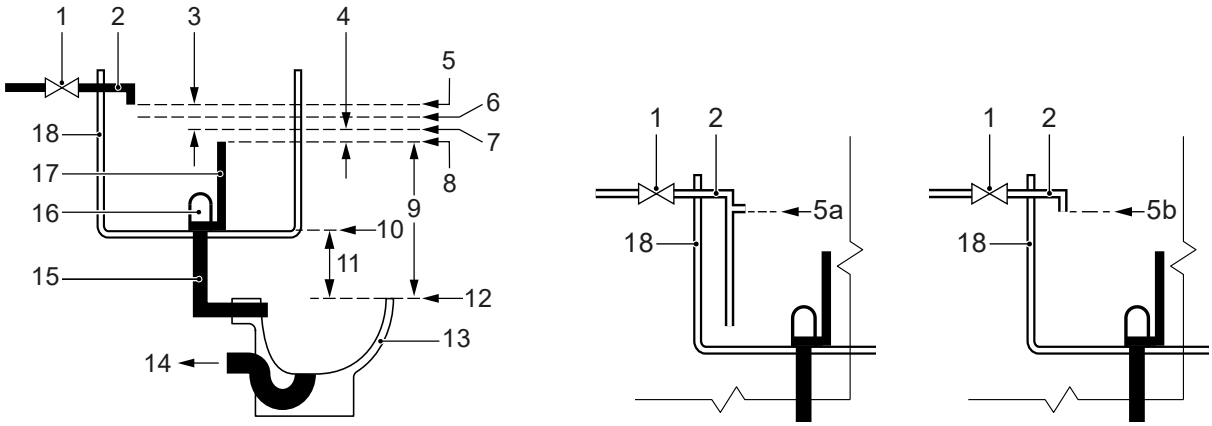

Type AUK4 arrangement

Type AC air gap

Type AG air gap

Key for Figure 1

1 service valve

2 inlet device

3 air gap (type AC or AG)

4 dimension (h) above the spillover level

5 inlet device air gap reference point:
a) Type AC air gap, lowest point of air inlet orifice
b) Type AG air gap, lowest point of discharge

6 maximum water level

7 critical water level (h)

8 overflow invert level

9 ≥150 mm

10 internal spillover level with flushing devices etc. removed

11 ≥15 mm

12 receiving vessel spillover level

13 receiving vessel (e.g. WC pan)

14 receiving vessel outlet

15 discharge pipe from interposed flushing cistern

16 flushing device

17 overflow

18 interposed flushing cistern

A6 APPARATUS

The following apparatus is required:

a) Measuring equipment with an accuracy of 0.5 mm.

A7 PROCEDURE

The procedure shall be as follows:

a) WC pan with associated flushing cistern and/or flushing device, or a close coupled/one-piece suite, all meeting the appropriate requirements of this specification, installed in accordance with the manufacturer's instructions on a firm, flat horizontal/vertical surface as appropriate.

b) Ensure that the interposed flushing cistern complies with the requirements of Type AC air gap (Test Code Sheet 2213.15) or Type AG air gap (Test Code Sheet 2212.3).

c) With the flushing device completely removed use sufficient water to establish the residual fluid level within the flushing cistern.

d) Allow sufficient time for the fluid level to stabilise. Measure the dimension between the spillover level of the receiving vessel (e.g. WC pan) and the lowest internal residual fluid level of the interposed flushing cistern.

e) Measure the dimension between the spillover level of the receiving vessel (e.g. WC pan) and the invert level of the overflow pipe.

Figure 2 Flushing cistern showing the internal spillover level

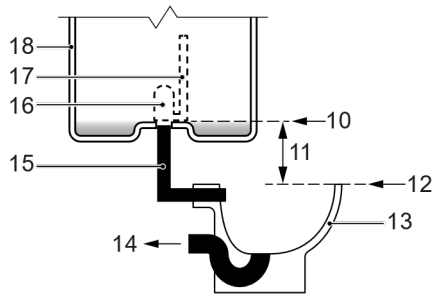

Key for Figure 2

10 internal spillover level with flushing devices etc. removed

11 ≥15 mm

12 receiving vessel spillover level

13 receiving vessel (e.g. WC pan)

14 receiving vessel outlet

15 discharge pipe from interposed flushing cistern

16 flushing device removed

17 overflow removed

18 interposed flushing cistern

(B) TYPE AUK4 - COMPONENT COMPATIBILITY (INTERNAL OVERFLOW)

TEST METHOD

B1 Scope

Procedure B specifies additional verification requirements and applies to all WC Suites incorporating Type AUK4 air gaps unless they include one or more of the following:

- An inlet valve achieving a Type AG air gap;
- A diaphragm operated siphon; or
- An overflow which discharges external to the WC suite (i.e. overflowing water does not return to the flush pipe or WC pan).

When tested as described in B4 no fluids (discounting droplets) rise within the overflow pipe to a level less than or equal to 20 mm, measured vertically down from the overflow invert level.

B2 Pre-testing

The following tests shall be successfully completed prior to undertaking the test.

a) verification of warning and overflow provision (Test Code Sheet 5011.7);

b) verification of flushing volume (Test Code Sheet 3212.1);

c) verification of the flush rate (Test Code Sheet 1511.2);

d) verification of an air gap (e.g. Type AC air gap - Test Code Sheet 2213.15);

e) verification of the Type AUK4 backflow prevention arrangement – Procedure A above.

B3 Apparatus

a) Receiving vessel with associated flushing cistern (e.g. close coupled, low level, concealed etc.), or one-piece WC suite, with a flushing device, warning/overflow and inlet valve meeting the appropriate requirements of the Regulator's WC Suite Performance Specification;

b) Appropriate device(s) to block the outlet of the receiving vessel (e.g. WC pan) and any external warning provisions (e.g. warning pipe);

c) Continuity probes with a latched indicator circuit, or a no less effective method;

d) Measuring instrument;

e) Water supply controlled by a stop valve as appropriate.

Figure 3 (informative) diagram showing continuity probe method

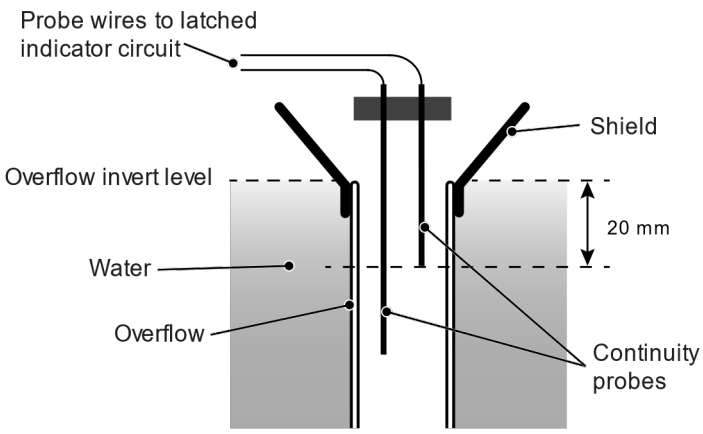

B4 Procedure

a) Assemble all components of the assembly (e.g. WC suite) including fittings following the manufacturers' installation instructions, on a firm, flat horizontal/vertical surface as appropriate;

b) Block all outlets of the receiving vessel (e.g. WC trap) and any external warning provision (e.g. warning pipe);

c) Fill the receiving vessel with water to the spillover level of the receiving vessel;

d) Fill the flushing cistern to the invert level of the overflow. If the inlet valve is connected to a water supply, turn off the water supply unless essential for the normal operation of the flushing device (see Notes 4-6);

e) Ensure the internal surface of the internal overflow pipe is sufficiently free of moisture which would otherwise cause inaccurate measurement of the rising water;

f) Rapidly operate the flushing mechanism and allow the flushing cistern to drain during the full flush operation (see Note 7);

g) Observe and record results appropriate for the test method, e.g. visually observed the level the fluid reached; continuity probe method if the fluid exceeds the 20 mm level (see Notes 5);

h) Repeat test 5 times.

NOTE 4: Where a water supply is essential for the normal operation of the flushing device maintain the supply at a hydraulic pressure of 1.5 ±0.1 bar or the minimum required to operate the device whichever is the greater.

NOTE 5: To prevent the water within the flushing cistern accidentally spilling over the invert into the overflow a shield is permitted to be applied to the external surface of the overflow pipe.

NOTE 6: Where there are multiple water and overflow levels; or combinations of flushing device(s) and or overflow(s) the test shall be completed for each qualifying combination (see B4).

NOTE 7: Operating the flushing mechanism (e.g. the time taken to operate the lever/button and fully activate the full flush) within approximately 1 second is considered ‘rapid’ and within approximately 3 seconds ‘slow’.

B5 Expression of results

Record compliance or any failure to comply, with the requirements.

7. ACCEPTANCE CRITERIA

6.1 Test method (A)

When tested as described in A7:

a) The assembly must satisfy the appropriate requirements for Type AC air gaps (Test Code Sheet 2213.15) or Type AG air gaps (Test Code Sheet 2212.3); and

b) With the flushing device completely removed, the measurement between the spillover level of the receiving vessel and the lowest internal residual fluid level

of the interposed flushing cistern is equal to or greater than 15 mm. See Figure 1; and

c) The measurement between the spillover level of the receiving vessel and the invert level of the overflow is equal to or greater than 150 mm.

6.2 Test method (B)

When tested as described in procedure B4 no fluids rise within the overflow pipe to a level less than or equal to 20 mm, measured vertically down from the invert level of the overflow.

Test Code Sheet 2213.21 Joints below critical water level

1. PURPOSE

Inlet valve: Joints below the water line verification as described in WC Suite Performance Specifications.

2. TYPE OF TEST(S)

Joints below critical water level.

3. REGULATION REQUIREMENTS FOR FITTINGS.

Schedule 2

25. (1) Subject to the following provisions of this paragraph-

a. every water closet pan shall be supplied with water from a flushing cistern, pressure flushing cistern or pressure flushing valve, and shall be so made and installed that after normal use its contents can be cleared effectively by a single flush of water, or, where the installation is designed to receive flushes of different volumes, by the largest of those flushes;

b. no pressure flushing valve shall be installed-

i. in a house, or

ii. in any building not being a house where a minimum flow rate of 1.2 litres per second cannot be achieved at the appliance;

c. where a pressure flushing valve is connected to a supply pipe or distributing pipe, the flushing arrangement shall incorporate a backflow prevention device consisting of a permanently vented pipe interrupter located not less than 300mm above the spillover level of the WC pan or urinal:

d. no flushing device installed for use with a WC pan shall give a single flush exceeding 6 litres;

e. no flushing device designed to give flushes of different volumes shall have a lesser flush exceeding two-thirds of the largest flush volume;

f. every flushing cistern, other than a pressure flushing cistern, shall be clearly marked internally with an indelible line to show the intended volume of flush, together with an indication of that volume;

g. a flushing cistern designed to give flushes of different volumes-

i. shall have a readily discernible method of actuating the flush of different volumes; and

ii. shall have instructions, clearly and permanently marked on the cistern or displayed nearby, for operating it to obtain the different volumes of flush;

h. every flushing cistern, not being a pressure flushing cistern or a urinal cistern, shall be fitted with a warning pipe or with a no less effective device;

i. every urinal that is cleared by water after use shall be supplied with water from a flushing device which-

i. in the case of a flushing cistern, is filled at a rate suitable for the installation;

ii. in all cases, is designed or adapted to supply no more water than is necessary for effective flow over the internal surface of the urinal and for replacement of the fluid in the trap; and

j. except in the case of a urinal which is flushed manually, or which is flushed automatically by electronic means after use, every pipe which supplies water to a flushing cistern or trough used for flushing a urinal shall be fitted with an isolating valve controlled by a time switch and a lockable isolating valve, or with some other equally effective automatic device for regulating the periods during which the cistern may fill.

(2) Every water closet, and every flushing device designed for use with a water closet, shall comply with a specification approved by the regulator for the purposes of this Schedule.

(3) The requirements of sub-paragraphs (1) and (2) do not apply where faeces or urine are disposed of through an appliance that does not solely use fluid to remove the contents.

(4) The requirement in sub-paragraph (1)(i) shall be deemed to be satisfied-

a) in the case of an automatically operated flushing cistern servicing urinals which is filled with water at a rate not exceeding-

i. 10 litres per hour for a cistern serving a single urinal;

ii. 7.5 litres per hour per urinal bowl or stall, or, as the case may be, for each 700 mm width of urinal slab, for a cistern serving two or more urinals;

b) in the case of a manually or automatically operated pressure flushing valve used for flushing urinals which delivers not more than 1.5 litres per bowl or position each time the device is operated.

(5) Until 1st January 2001 paragraphs (1)(a) and (d) shall have effect as if they provided as follows-

a) "every water closet pan shall be supplied with water from a flushing cistern or trough of the valveless type which incorporates siphonic apparatus;"

b) "no flushing device installed for use with a WC pan shall give a single flush exceeding 7.5 litres;".

(6) Notwithstanding sub-paragraph 1(d), a flushing cistern installed before 1st July 1999 may be replaced by a cistern which delivers a similar volume and which may be either single flush or dual flush; but a single flush cistern may not be so replaced by a double flush cistern.

(7) In this paragraph-

"pressure flushing cistern" means a WC flushing device that utilises the pressure of water within the cistern supply pipe to compress air and increase the pressure of water available for flushing a WC pan;

"pressure flushing valve" means a self-closing valve supplied with water directly from a supply pipe or a distributing pipe which when activated will discharge a pre-determined flush volume;

"trap" means a pipe fitting, or part of a sanitary appliance, that retains liquid to prevent the passage of foul air; and

"warning pipe" means an overflow pipe whose outlet is located in a position where the discharge of water can be readily seen.

4. BRITISH STANDARD OR WATER SPECIFICATION DEEMED TO SATISFY WATER REGULATIONS REQUIREMENTS.

4.1 None

5. GENERAL TOLERANCES AND MEASUREMENTS

In the absence of specific tolerances or accuracies the general tolerances and measurements set out in the WC Suite Performance Specifications shall apply.

6. TEST PROCEDURE.

6.1 Tests are applicable to the following fittings.

Water inlet devices and connecting pipes within a WC flushing cistern.

(A) ALL WC CISTERNS SUPPLIED EITHER AS SUITES OR SEPARATLY, WHICH REQUIRE TO BE TESTED TO THE REGULATOR'S SPECIFICATION FOR WC'S.

6.2 Apparatus

a) cistern, complete with fitments including, inlet valve flushing device, overflow, warning pipe (or no less effective arrangement) and flushpipe.

b) water supply

6.3 Procedure

a) install cistern, complete with all fitments in accordance with the manufacturer's instructions;

b) Determine the critical water level using the procedure set out in the Test Code Sheet appropriate for the backflow prevention arrangement (i.e. Type AC air gap - TCS 2213.15 or Type AG TCS 2212.3);

c) At the critical water level inspect all mechanical joints.

Mechanical joints are joints which when undone open a direct pathway between the wholesome water (incoming supply) and the fluids stored within the flushing cistern. These include joints that:

a. are 'adjustable' or can be 'dismantled'; or

b. rely on elastomeric, or other material, to provide a water-tight seal; or

c. where the coupling of two components being dependent upon mechanically applied forces, with or without the use of secondary seal.

Joints not considered *mechanical joints* include:

a. Nuts or jointing mechanism on the diaphragm housing assembly.

b. Joints where the joining surface are permanently fused together, for example by a chemical process or the application of heat.

6.4 Expression of results

Record the compliance or any failure to comply with the requirements.

7. ACCEPTANCE CRITERIA

When tested as described in6.3 no mechanical joints within a flushing cistern on submerged supply pipes or inlet devices shall be at or below the critical water level.

Test Code Sheet 5011.7 Warning pipe and overflow provision

1. PURPOSE

Flushing Cisterns: Warning and Overflow Pipe Provision verification as described in WC Suite Performance Specifications.

2. TYPE OF TEST(S)

Warning pipe and overflow provision.

3. REGULATION REQUIREMENTS FOR FITTINGS.

Schedule 2

25. (1) Subject to the following provisions of this paragraph-

a. every water closet pan shall be supplied with water from a flushing cistern, pressure flushing cistern or pressure flushing valve, and shall be so made and installed that after normal use its contents can be cleared effectively by a single flush of water, or, where the installation is designed to receive flushes of different volumes, by the largest of those flushes;

b. no pressure flushing valve shall be installed-

i. in a house, or

ii. in any building not being a house where a minimum flow rate of 1.2 litres per second cannot be achieved at the appliance;

c. where a pressure flushing valve is connected to a supply pipe or distributing pipe, the flushing arrangement shall incorporate a backflow prevention device consisting of a permanently vented pipe interrupter located not less than 300mm above the spillover level of the WC pan or urinal:

d. no flushing device installed for use with a WC pan shall give a single flush exceeding 6 litres;

e. no flushing device designed to give flushes of different volumes shall have a lesser flush exceeding two-thirds of the largest flush volume;

f. every flushing cistern, other than a pressure flushing cistern, shall be clearly marked internally with an indelible line to show the intended volume of flush, together with an indication of that volume;

g. a flushing cistern designed to give flushes of different volumes-

i. shall have a readily discernible method of actuating the flush of different volumes; and

ii. shall have instructions, clearly and permanently marked on the cistern or displayed nearby, for operating it to obtain the different volumes of flush;

h. every flushing cistern, not being a pressure flushing cistern or a urinal cistern, shall be fitted with a warning pipe or with a no less effective device;

i. every urinal that is cleared by water after use shall be supplied with water from a flushing device which-

i. in the case of a flushing cistern, is filled at a rate suitable for the installation;

ii. in all cases, is designed or adapted to supply no more water than is necessary for effective flow over the internal surface of the urinal and for replacement of the fluid in the trap; and

j. except in the case of a urinal which is flushed manually, or which is flushed automatically by electronic means after use, every pipe which supplies water to a flushing cistern or trough used for flushing a urinal shall be fitted with an isolating valve controlled by a time switch and a lockable isolating valve, or with some other equally effective automatic device for regulating the periods during which the cistern may fill.

(2) Every water closet, and every flushing device designed for use with a water closet, shall comply with a specification approved by the regulator for the purposes of this Schedule.

(3) The requirements of sub-paragraphs (1) and (2) do not apply where faeces or urine are disposed of through an appliance that does not solely use fluid to remove the contents.

(4) The requirement in sub-paragraph (1)(i) shall be deemed to be satisfied-

a) in the case of an automatically operated flushing cistern servicing urinals which is filled with water at a rate not exceeding-

i. 10 litres per hour for a cistern serving a single urinal;

ii. 7.5 litres per hour per urinal bowl or stall, or, as the case may be, for each 700 mm width of urinal slab, for a cistern serving two or more urinals;

b) in the case of a manually or automatically operated pressure flushing valve used for flushing urinals which delivers not more than 1.5 litres per bowl or position each time the device is operated.

(5) Until 1st January 2001 paragraphs (1)(a) and (d) shall have effect as if they provided as follows-

a) "every water closet pan shall be supplied with water from a flushing cistern or trough of the valveless type which incorporates siphonic apparatus;"

b) "no flushing device installed for use with a WC pan shall give a single flush exceeding 7.5 litres;".

(6) Notwithstanding sub-paragraph 1(d), a flushing cistern installed before 1st July 1999 may be replaced by a cistern which delivers a similar volume and which may be either single flush or dual flush; but a single flush cistern may not be so replaced by a double flush cistern.

(7) In this paragraph-

"pressure flushing cistern" means a WC flushing device that utilises the pressure of water within the cistern supply pipe to compress air and increase the pressure of water available for flushing a WC pan;

"pressure flushing valve" means a self-closing valve supplied with water directly from a supply pipe or a distributing pipe which when activated will discharge a pre-determined flush volume;

"trap" means a pipe fitting, or part of a sanitary appliance, that retains liquid to prevent the passage of foul air; and

"warning pipe" means an overflow pipe whose outlet is located in a position where the discharge of water can be readily seen.

4. BRITISH STANDARD OR WATER SPECIFICATION DEEMED TO SATISFY WATER REGULATIONS REQUIREMENTS.

4.1 None

5. GENERAL TOLERANCES AND MEASUREMENTS

In the absence of specific tolerances or accuracies the general tolerances and measurements set out in the WC Suite Performance Specifications shall apply.

6. TEST PROCEDURE.

6.1 Tests are applicable to the following fittings.

ALL WC CISTERNS SUPPLIED EITHER AS SUITES OR SEPARATLY, which require to be tested to the regulator's specification for WC suites.

(A) ALL WC CISTERNS SUPPLIED EITHER AS SUITES OR SEPARATLY, WHICH REQUIRE TO BE TESTED TO THE REGULATOR'S SPECIFICATION FOR WC'S.

6.2 Apparatus

a) the cistern with warning pipe connection or a device deemed to be no less effective and internal overflow, if provided, installed in accordance with the manufacturer's instructions.

b) measuring device.

c) water supply controlled by a stop valve.

6.3 Procedure

1. Set the cistern level.
2. Fill with water to the nominal static water level marked by the manufacturer.
3. Measure the distance from the water level to the warning level, i.e. the invert of a side connection warning pipe connection or top of a bottom connection warning pipe connection. If appropriate, measure the distance from the warning level to the top of any internal overflow.

   Note: In some instances, such as with syphons, the levels may need to be determined by filling with water to the appropriate warning and overflow level.

6.4 Expression of results

Record the compliance or any failure to comply with the requirements.

7. ACCEPTANCE CRITERIA

Reference Figure 1 & 2 for dimensional requirements.

When tested as described in 6.3, every flushing cistern, not being a pressure flushing cistern, shall be arranged-

a) in the case of a combined warning and overflow pipe (Figure 1)-

   i. with the discharge level between 20 mm and 51 mm inclusive, above the marked water level.

or

b) in the case of separate warning and overflow pipes (Figure 2)-

i. fitted with a warning pipe arranged with the discharge level between 20 mm and 41 mm inclusive above the marked water level; and

ii. the top edge of any internal overflow between 30 mm and 51 mm inclusive and not less than 10 mm above the warning level.

An alternative, no less effective device, may be used in place of a warning pipe.

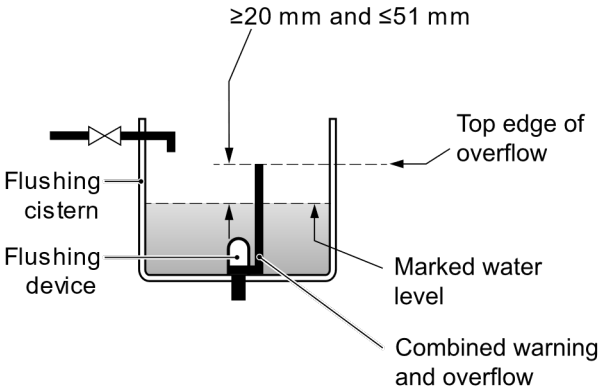

Figure 1 - Flushing cistern with combined warning and overflow provision

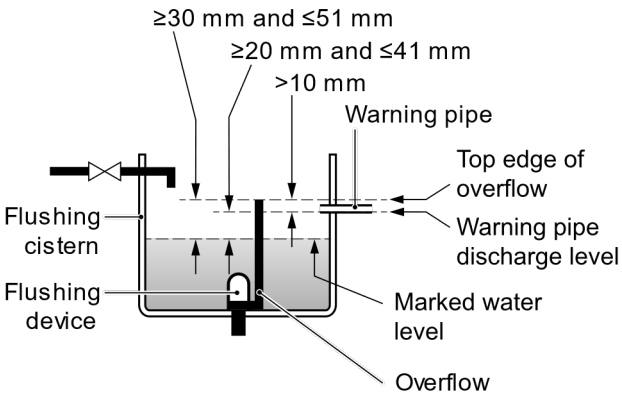

Figure 2 - Flushing cistern with separate warning and overflow provisions

To be withdrawn:

Test Code Sheet 5011.5 Overflow – Measurement of dimension

---

1. TYPE OF TEST(S)

Measurement of dimension.

2. BYELAW REQUIREMENT FOR FITTINGS

Byelaw 1

..... spill-over level means the level at which the water in a cistern or vessel will first spill over if the inflow exceeds the outflow through any outlet and any overflow pipe.
.....warning pipe means an overflow pipe so fixed that its outlet, whether inside or outside the building, is in a conspicuous position where the discharge of water can be readily seen.

Byelaw 39

Every warning pipe shall be installed so as to discharge water immediately the water in the cistern reaches overflowing level.

Byelaw 40

No warning or overflow pipe shall comprise, include or have connected to it, any flexible hose.

Byelaw 80

Every flushing cistern or trough installed in any premises supplying water to a watercloset pan shall be fitted with a warning pipe and shall be indelibly marked on the inside with a line indicating the water level at which the float-operated valve is to shut off when that cistern or trough operates to comply with the relevant provision of byelaws 75 to 77 and 79.

3. BRITISH STANDARDS OR WATER SPECIFICATION, DEEMED TO SATISFY BYELAW REQUIREMENT

3.1 At present no British Standard or Water Industry Specification exists.

4. TEST PROCEDURE

Note Unless otherwise stated the temperature of the test fluid shall be 20 ± 10°C.

4.1 Tests applicable to the following:-

VALVES
- flap for use with wc flushing cisterns
- drop for use with wc flushing cisterns

metal and plastic design.

Test Code Sheet Number	5	0	1	1	5

Issue No: 1
Date of issue: October 1998

(A) DROP AND FLAP VALVE FOR USE WITH WC FLUSHING CISTERNS

TEST METHOD

Valves incorporating an 'internal overflow to pan' arrangement shall meet the following requirement.

(a) Measure the distance between the waterline in the cistern and the invert of the overflowing level of the external warning pipe.

(b) Measure the distance between the waterline in the cistern and the invert of the 'internal overflow' of the valve.

5. ACCEPTANCE CRITERIA

(a) The distance between the invert of the overflowing level of the external warning pipe and the waterline, shall be not less than 25mm or more than 32mm.

(b) The distance between the invert of the 'internal overflow' of the valve and the waterline shall be not less than the 25mm to 32mm as required in (a) with an additional 19mm. (ie. 44mm to 51mm above the waterline).

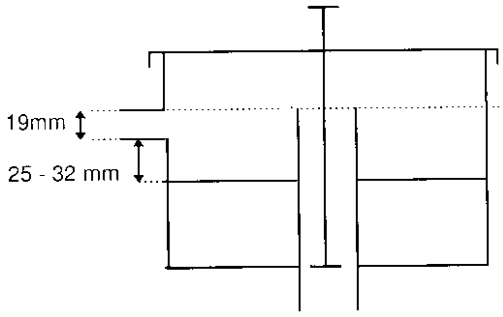

WC flushing cistern with side entry external warning pipe and internal overflow to pan.

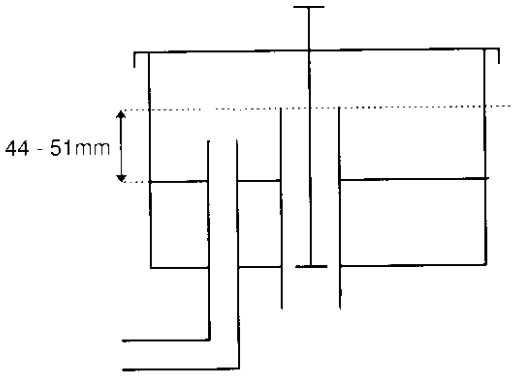

WC flushing cistern with bottom entry external warning pipe and internal overflow to pan.